gesis® TOP

wieland

gesis® TOP

Luminaires
connector concepts

Modular lighting solutions

DIVERSE ELECTRONICS
1 (800) 381-7308 / (514) 388-7308
sales@diverseelectronics.com
www.diverseelectronics.com
25 1993 2018 ANNIVERSARY DIVERSE ELECTRONICS
CERTIFIED ISO 9001:2015 CERTIFIED
erai MEMBER

gesis® TOP – your choice:
Pluggable with gesis® or conventional.

Every luminaire is a pluggable luminaire!

Wieland is known for innovations in the field of pluggable installation. Easy – safe – fast – flexible are the maxims of our actions. With the future-oriented **gesis** TOP connector concept, this is realized for electrical installations in modern buildings right down to the luminaire. Thus we are finding new approaches regarding pluggability.

The idea: Every luminaire can optionally be upgraded with **gesis**.

Therefore, you can decide to use the pluggability at any time, without the need for an extra inquiry. Even in case of a replacement you can go back to standard luminaire types.

Main features

- Customary, internal luminaire connection
- Luminaire can be upgraded with **gesis** adapter to achieve pluggability
- Easy and safe handling
- (optional) pluggable luminaires become standard items available from stock

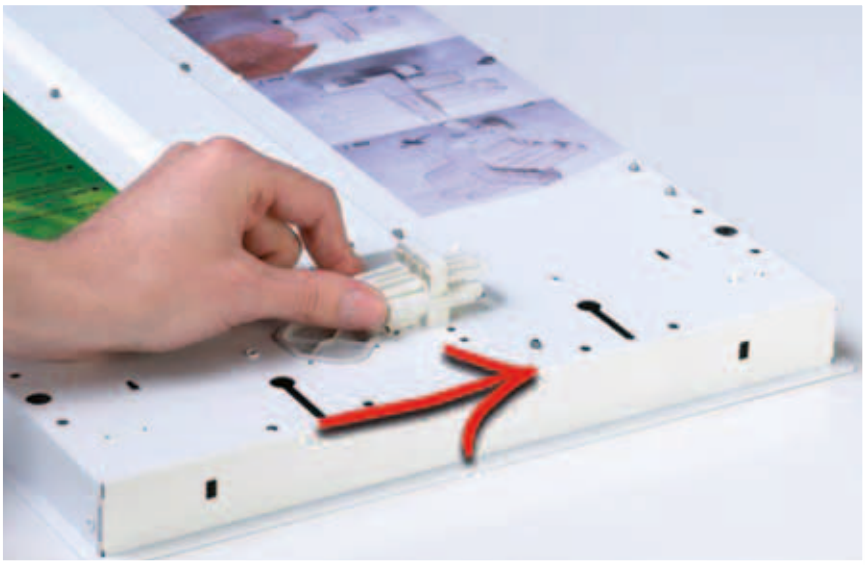

Phase 1
The idea is used – Standard luminaires become pluggable thanks to pre-assembled *gesis* cables ▼

Phase 2
The idea is being accepted – Standard luminaires become pluggable luminaires by simple snap-on connection of *gesis* TOP at the construction site ▼

Phase 3
The idea becomes the standard – *gesis* solder parts + device connectors are 100% integrated into luminaires ▼

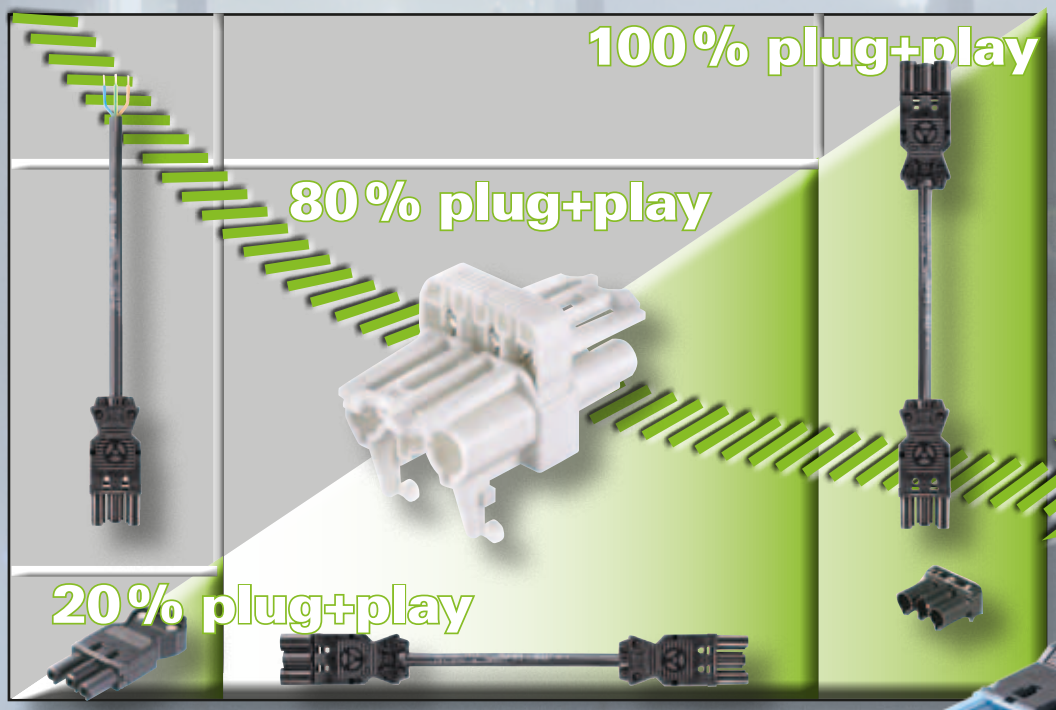

Costs: –70%

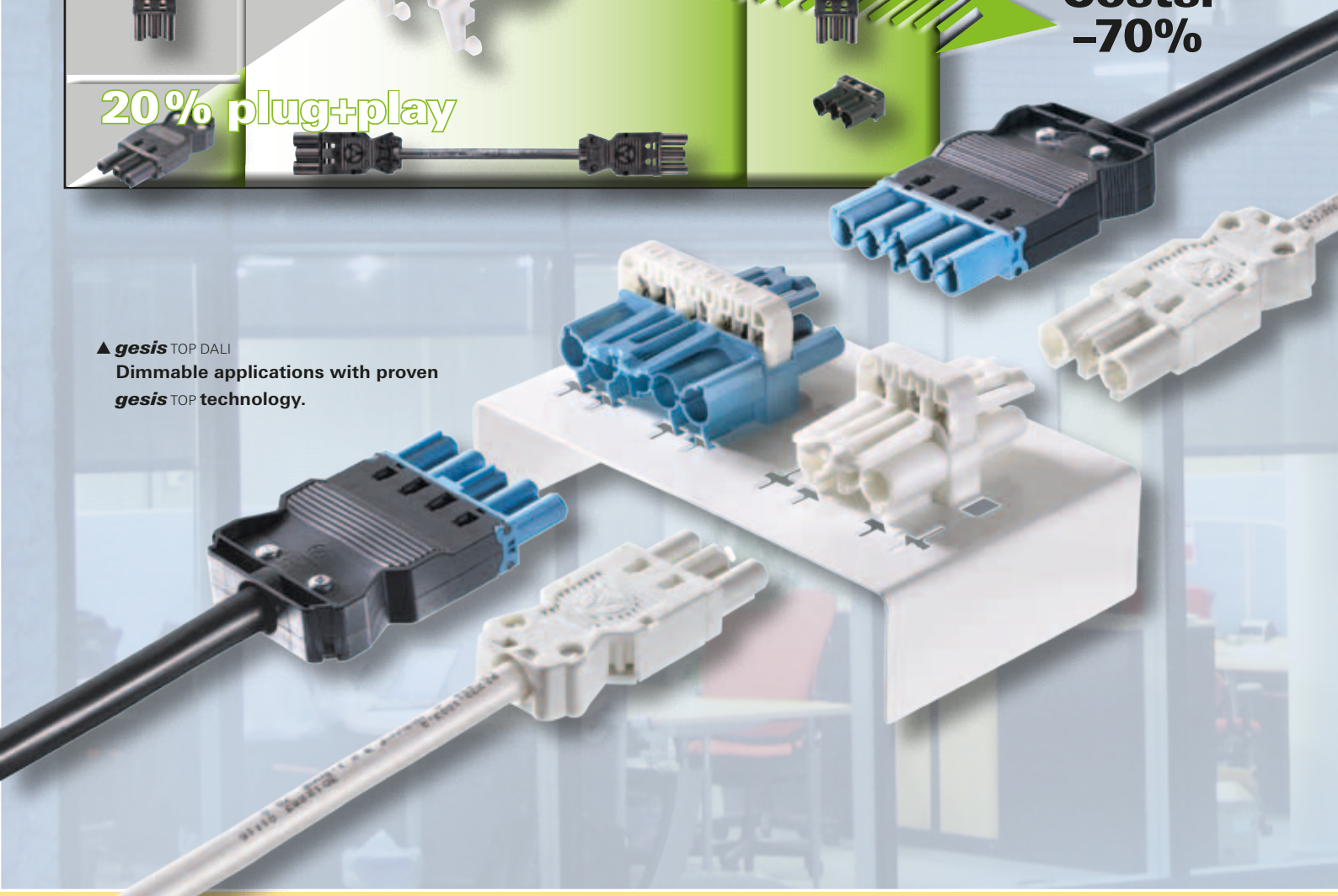

▲ *gesis* TOP DALI
Dimmable applications with proven *gesis* TOP technology.

◀ Through Wieland's *gesis* TOP adapter a conventional luminaire (with terminal block by BJB and *gesis* TOP sheet-metal cut out) simply becomes a pluggable luminaire by plugging and contacting without tools.

contacts are green.
wieland

The luminaire connection adapter: easy, fast and safe connection

General

Modern luminaires are "***gesis*** TOP ready". Whether the luminaire is connected conventionally via the terminal block or pluggable, these luminaires can both.

Through the Wieland ***gesis*** TOP adapter a conventional luminaire (with terminal block by BJB and ***gesis*** TOP sheet-metal cut out) simply becomes a pluggable luminaire by plugging and contacting without tools.

Benefits at a glance:

- Reduction of the luminaire type variety
- Unique production flow
- Easy mounting setup
- Universal installation and easy connection
- Fast and safe installation at 100 % flexibility
- Plug compatible with GST 18i3 and GST 18i5 series

Further information regarding the full range of *gesis* can be found in

0600.1 *gesis* CON "The art of plugging"

and in our e-CAT for direct ordering with more information, drawings etc. under http://eshop.wieland-electric.com

gesis TOP 3 pole

Adapter for power supply

Description	Color	Part No.
gesis TOP adapter	white	92.030.2153.0
Luminaire terminal, by BJB	white	(46.413.1302 – to be ordered from BJB)

Rated voltage	250 V
Rated current	20 A
Rated current	2 A (Current output to the luminaire)
Number of poles	3
Protection class	IP 40
Approvals	IEC 61535

Sample kit

Description	Part No.
gesis TOP DALI sample kit	99.669.0000.0

System accessories
gesis TOP DALI

Description	Color	Part No.
GST18i3 Connecting cable 3 m, 1.5 mm²	white	92.232.3000.2
GST18i3 Connecting cable 5 m, 1.5 mm²	white	92.232.5000.2
GST18i3 Connecting cable 3 m, 2.5 mm²	white	92.238.3000.2
GST18i3 Connecting cable 5 m, 2.5 mm²	white	92.238.5000.2
GST18i3 female	white	92.931.3053.0

Technical data
gesis® TOP 3 pole

Technical Data gesis TOP:

- Rated voltage max. 250 V
- Rated current max. 20 A
- Rated current max. 2 A,
  Through-wiring to luminaire terminal
- Temperature range -40° C to +120° C
- Protection class IP 40
- Approval IEC 61535
- Color white
- Dimensions (L x W x H) 59.0 x 30.4 x 18.3 mm

Technical data luminaire terminal:

- According to the specifications of the manufacturer BJB
  Ref. no. BJB 46.413.1302

Dimensions

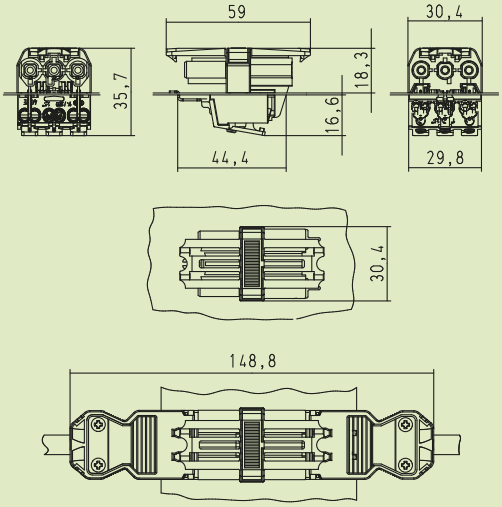

Required metal sheet cut out

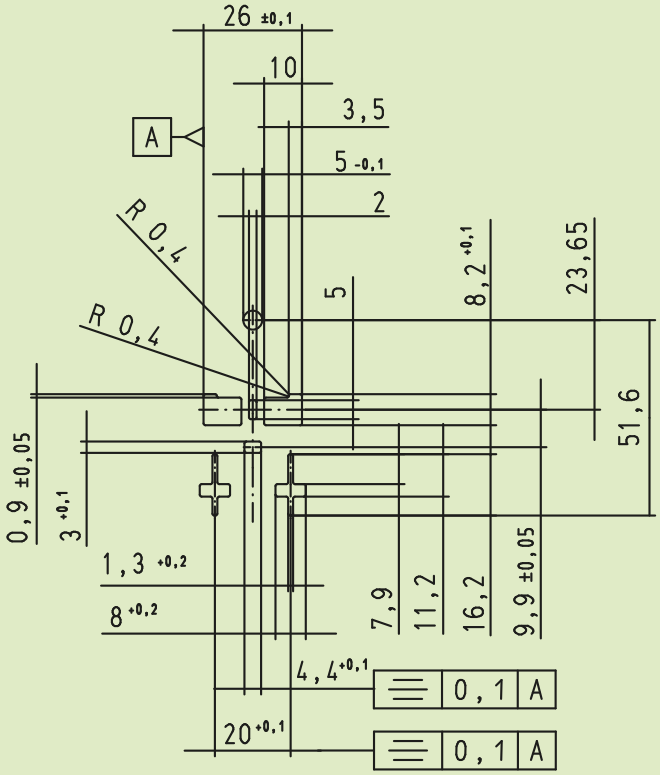

gesis TOP 5 pole

Adapter for control terminal

Description	Color	Part No.
gesis TOP DALI adapter	pastel blue	92.050.2853.0
DALI luminaire terminal, by BJB	white	(46.415.1302 – to be ordered from BJB)

Rated voltage	250 V
Rated current	20 A
Rated current	2 A (Current output to the luminaire)
Number of poles	5
Protection class	IP 40
Approvals	IEC 61535

Sample kit

Description	Part No.
gesis TOP DALI sample kit	99.669.0000.0

System accessories gesis TOP DALI

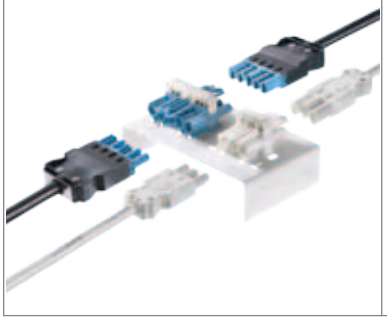

Description	Color	Part No.
GST18i5 Connecting cable 3 m, 1.5 mm²	pb/black	92.257.3000.9
GST18i5 Connecting cable 5 m, 1.5 mm²	pb/black	92.257.5000.9
GST18i5 Connecting cable 3 m, 2.5 mm²	pb/black	92.258.3000.9
GST18i5 Connecting cable 5 m, 2.5 mm²	pb/black	92.258.5000.9
GST18i5 female, 2.5 mm²	pb/black	92.953.4453.0

Technical data
gesis® TOP 5 pole

Technical Data *gesis* TOP:

- Rated voltage max. 250 V
- Rated current max. 20 A
- Rated current max. 2 A,
  Through-wiring to luminaire terminal
- Temperature range -40° C to +120° C
- Protection class IP 40
- Approval IEC 61535
- Color white/pastel blue
- Dimensions (L x W x H) 59.0 x 49.9 x 18.3 mm

Technical data luminaire terminal:

- According to the specifications of the manufacturer BJB

Ref. no. BJB 46.415.1302

Dimensions

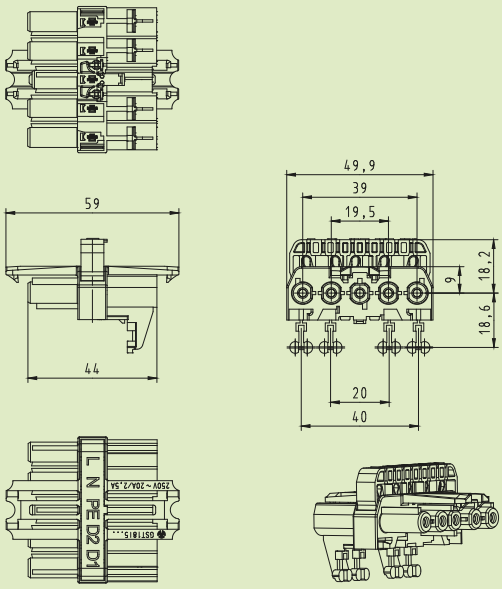

Required metal sheet cut out

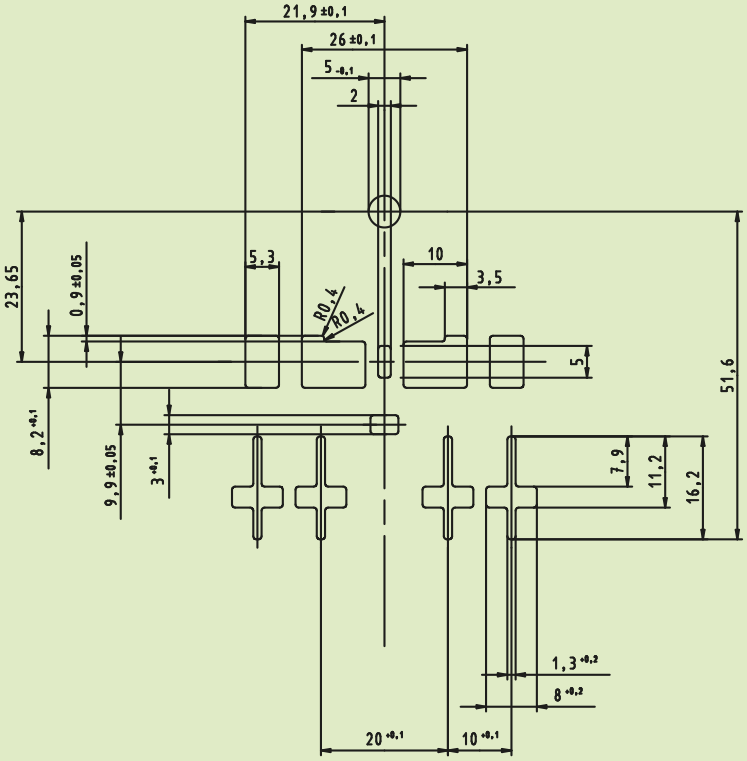

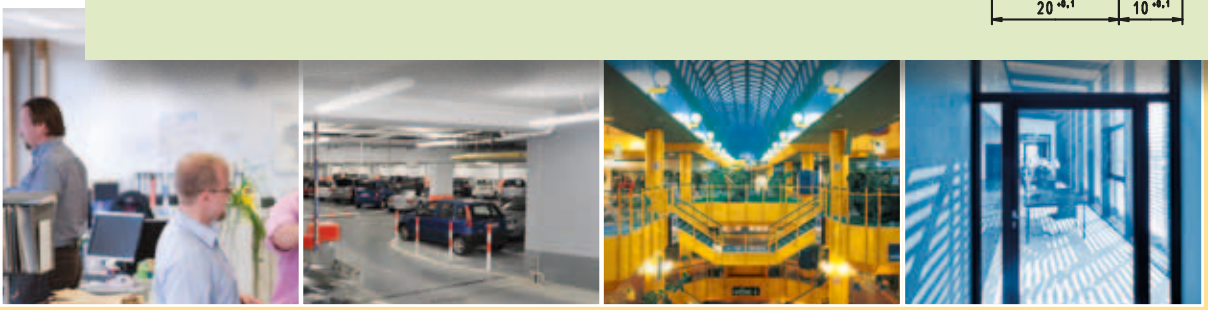

Hotline, advice
Additional information

Technical support
Automation technology:

- Safety technology ***safety***
  Phone: +49 951 9324-999
  e-mail: safety@wieland-electric.com
- Remote power distribution ***podis*** ®
  Phone: +49 951 9324-998
- ***interface:*** Power supply, industrial Ethernet switches, timer relays, measuring and monitoring relays, coupling relays, analog modules, remote I/O, surge protection, passive interfaces
  Phone: +49 951 9324-995
- DIN rail terminal blocks ***fasis, selos***
  Phone: +49 951 9324-991
- Industrial multipole connectors ***revos***
  Phone: +49 951 9324-992
- PCB terminals and connectors ***wiecon***
  Appliance terminals, european terminal strips, housings for electronic components
  Phone: +49 951 9324-993

Fax: +49 951 9326-991
e-mail: AT.TS@wieland-electric.com

Technical support
Building services engineering:

- System connectors for building installation
  gesis CON, ***gesis*** RAN, ***gesis*** ELECTRONIC
  Phone: +49 951 9324-996
- DIN rail terminal blocks ***fasis*** BIT, ***selos*** BIT
  Phone: +49 951 9324-991
  Fax: +49 951 9326-996
  e-mail: BIT.TS@wieland-electric.com

Technical support
Photovoltaics/solar technology:

- Photovoltaics ***gesis*** SOLAR
  Phone: +49 951 9324-972
  Fax: +49 951 9326-977
  e-mail: Solar@wieland-electric.com

Sales service:

- To contact our sales department regarding availability, delivery schedules, and pricing please call
  Phone: +49 951 9324-990

Additional information for pluggable installation:

gesis CON

The Art of Plugging	Part No. 0600.1
smart **Installation**	
Building a green future	Part No. 0408.1

Decentral Electronic:

gesis ELECTRONIC	Part No. 0700.1
gesis RAN	Part No. 0409.1

Information about Wieland products in general:

Wieland Product Overview	Part No. 0901.1

General information and news:
www.wieland-electric.com
Visit our eCAT at
http://eshop.wieland-electric.com

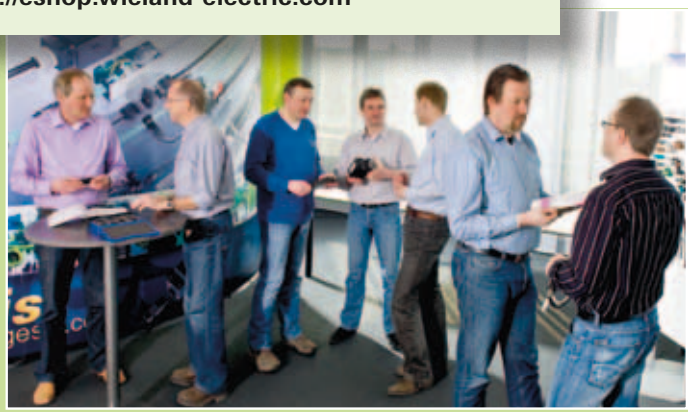

Distributed by:

DIVERSE ELECTRONICS
1-800-381-7308 514-388-7308
www.diverseelectronics.com
sales@diverseelectronics.com

Subject to technical modifications!
gesis®, podis®, samos® are registered trademarks of Wieland Electric GmbH

wieland

Headquarters:
Wieland Electric GmbH
Brennerstraße 10 – 14
96052 Bamberg, Germany

Sales and Marketing Center:
Wieland Electric GmbH
Benzstraße 9
96052 Bamberg, Germany

Phone +49 951 9324-0
Fax +49 951 9324-198
www.wieland-electric.com
www.gesis.com
info@wieland-electric.com

Industrial technology

Solutions for the control cabinet

- DIN rail terminal blocks
  - Screw, tension spring or push-in connection technology
  - Wire cross sections up to 240 mm^2
  - Numerous special functions
  - Software solutions interfacing to CAE systems
- Safety
  - Safe signal acquisition
  - Safety switching devices
  - Modular safety modules
  - Compact safety controllers
  - Applicative consultancy and training
- Network engineering and fieldbus systems
  - Remote maintenance via VPN industrial router and VPN service portal
  - Industrial Ethernet switches
  - PLC and I/O systems, standard and increased environmental conditions
- Interface
  - Power supply units
  - Overvoltage protection
  - Coupling relays, semiconductor switches
  - Timer relays, measuring and monitoring relays
  - Analog coupling and converter modules
  - Passive interfaces

Solutions for field applications

- Decentralized installation and automation technology
  - Electrical installation for wind tower
  - Fieldbus interfaces and motor starters
- Connectors for industrial applications
  - Rectangular and round connectors
  - Aluminum or plastic housings
  - Degree of protection up to IP 68
  - Current-carrying capacity up to 100 A
  - Connectors for hazardous areas
  - Modular, application-specific technology

PC board terminals and connectors

- Screw or spring clamp connection technology
- Spacings: 3.5 mm to 10.16 mm
- Reflow or wave soldering process

Building and installation technology

- Building installation systems
  - Main power supply connectors IP 20/IP 65 ... IP 68
  - Bus connectors
  - Low-voltage connectors
  - Power distribution system with flat cables
  - Distribution systems
  - Bus systems in KNX, LON and radio technology
  - DIN rail terminal blocks for electrical installations
  - Overvoltage protection

contacts are green.

0601.1 S 08/13