FOR-1351 Rev.1.0

| REVISION RECORD | | | | |
|---|---|---|---|---|
| REV | ECN | DESCRIPTION | DRFT | DATE |

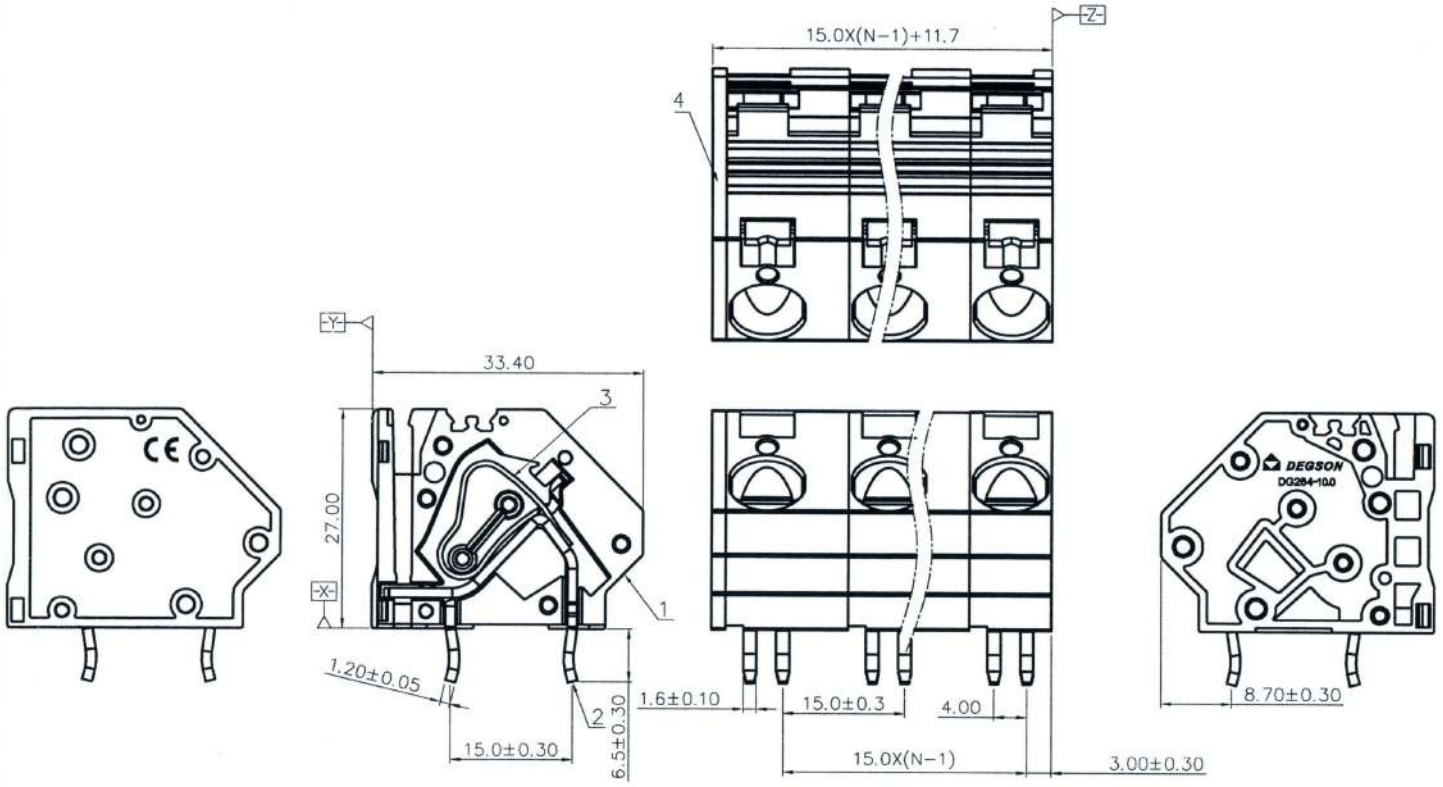


W/O COVER VIEW

NOTES1:
UL1059 Standard
1.Rated Voltage/Current : 300V / 65A
2.Withstanding Voltage : AC1600V/1Min.
3.Wire Range : 24~6AWG

IEC Standard
1.

| Pollution Degree | 2 | 2 | 3 |
|---|---|---|---|
| Overvoltage Category | II | III | III |
| Rate Impulse Voltage(KV) | 8.0KV | 8.0KV | 8.0KV |
| Rate Voltage(V) | 1000V | 1000V | 630V |
| Rate Current(A) | 76A | | |

2.Wire Range : 0.2~16mm$^2$

NOTES2:
1.Dimension shall be interpreted per ASME Y14.5-2009
2.Pitch : 15.0mm, Poles : N=01~12P
3.Stripping length : 12-13mm
4.Operating temperature: -40°C~+105°C
5.Undimensioned Tolerances:

| Pitch Range In mm | | | Nominal Dimension Range In mm | | | | | — ⌒ ▱ |
|---|---|---|---|---|---|---|---|---|
| TO 6 | Over 6 TO 10 | Over 10 TO 24 | TO 30 | Over 30 TO 60 | Over 60 TO 100 | Over 100 TO 150 | Over 150 | 0.1/10 |
| | | | | | | | | ∠ |
| ±0.15 | ±0.20 | ±0.30 | ±0.30 | ±0.50 | ±0.70 | ±1.00 | ±1.30 | ±2° |

6.RoHS Compliance

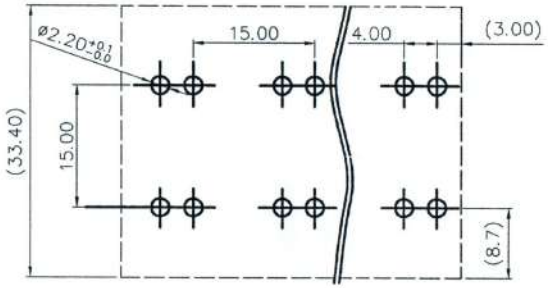


PCB LAYOUT

仅供参考图
签字: 蓝黄九
日期: 2015.12.10

| ITEM | NAME OF PART | MATERIAL | NOTES |
|---|---|---|---|
| 5 | Housing | PA66 | UL94 V-0 |
| 4 | Cover | PA66 | UL94 V-0 |
| 3 | Spring | Stainless steel | |
| 2 | Pin Header | Copper Alloy | Sn Plated |
| 1 | Housing | PA66 | UL94 V-0 |

DETACHED LISTS

PART NO.: /
APPD: Alan 12/10/15"
CHKD: Penny 12/10-15"
DRFT: WWF 07/07/15"

THIRD ANGLE PROJECTION

DEGSON® 宁波高松电子有限公司 NINGBO DEGSON ELECTRICAL CO., LTD

NAME: DG264-15.0-XXP-1Y-00A(H)

TITLE: CUSTOMER DRAWING | REV: D0-1
DRAWING NO.: DG264-15.0-C01 | SHEET: 1/1
MM (INCH) | DO NOT SCALE DRAWING | SCALE: 1:1