ST2 Series

High Amperage | Water Protection | Heavy Duty | Rear Panel Mount | RoHS

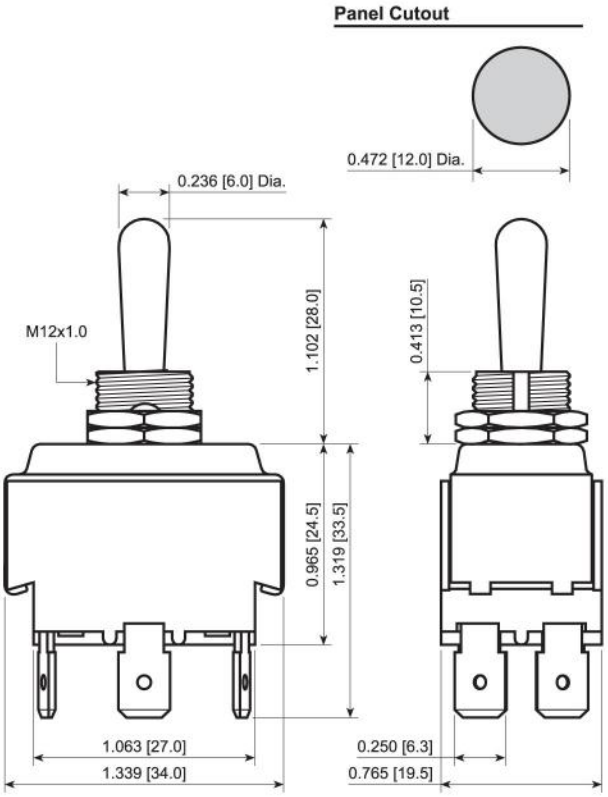

Bushing Options

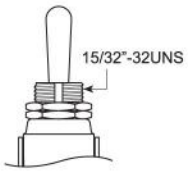

15/32"-32UNS

Terminal Options

Solder **Screw** **4.8mm Tab**

Water Protection Options

Rubber Boot

FEATURES:

- Heavy Duty Rating with UL Approvals
- Many Functions Available
- Tab, Screw, and Solder Terminal Options
- Rubber Boot for Water and Dust Protection

SPECIFICATIONS:

Rating: *Maintained Switches:*
20A 125VAC [cULus]
15A 250VAC [cULus]
2HP 125-250VAC [cULus]

Momentary Switches:
20A 125VAC [cULus]
15A 250VAC [cULus]
1.5HP 125-250VAC [cULus]

Temperature: -20°C to 85°C
Electrical Life: 6,000 Cycles
Contact Resistance: 50mΩ Max.
Insulation Resistance: 800MΩ Min. at 500VDC
Dielectric Strength: 1,500VAC for 1 Minute

MATERIALS:

Body: Phenolic, UL94 V-0
Actuator: Nickel Plated Brass
Bushing: Nickel Plated Brass
Housing: Stainless Steel
Contacts: Silver Alloy
Terminals: Silver Plated Brass

Toggle

Series	Terminal	Function	Rating	Actuator Type	Bushing Type
ST2	**1** - 4.8mm Tabs **2** - Solder **4** - 6.3mm Tabs **6** - Screw *Variable Length:* **W**x - Wire Leads (x in Inches)	*2 Pole:* **2** - Off-On **G** - On-On **E** - Off-(On) **6** - On-Off-On **J** - On-Off-(On) **K** - (On)-Off-(On)	**D** - 20A 125VAC	**0** - Standard Bat	**0** - M12x1.0 **2** - 15/32"-32UNS

Note:
Terminal bridging options available. See "Z02" function for polarity reversal in example photo.

ST226D00
ACC-B03-2
ACC-M01-3

ST24Z02D00

Accessories Series	Type	Options
ACC	*Rubber Boot:* **B03** - For Standard Bat *Marking Plates:* **M01** - ON/Off *Hardware:* **N02** - Knurled Nut	*Colors for Boot:* **2** - Black *Colors for Marking Plates:* **3** - Black, Red, and Silver *Threading:* **3** - 15/32"-32UNS **5** - M12x1.0

EXAMPLE PART NUMBERS:

ST242D00 — ***2P Off-On***
Standard Actuator/Bushing, 0.250" QC

ST246D00 — ***2P On-Off-On***
Standard Actuator/Bushing, 0.250" QC

SPECIFICATIONS SUBJECT TO CHANGE WITHOUT NOTICE