SUNON

SPECIFICATION FOR APPROVAL

MODEL NO ：**SA000-11009**

DESCRIPTION ：**Thermal Module**

DIMENSIONS ：**ϕ85X80 mm**

SUNON SPEC. NO. ：**C01000460F-01**

CUSTOMER APPROVAL NO. :

APPROVED BY CUSTOMER :

(AUTHORIZED)

DRAWN	CHECKED	APPROVED	SPEC. NO	C01000460F-01
			ISSUED DATE	09. 05. 2011
Fang	Amy	Eric	EDITION	1
			REVISION DATE	11. 08. 2011

建準電機工業股份有限公司
SUNONWEALTH ELECTRIC MACHINE INDUSTRY CO., LTD.
No. 30, LN. 296, XINYA RD., QIANZHEN DIST TEL:886-7-8135888
KAOHSIUNG CITY 80673, TAIWAN(R. O. C) FAX:886-7-8230505/8230606/8231010
URL:http://www.sunon.com E-mail: sunon@email.sunon.com.tw

SPECIFICATION FOR APPROVAL

CHECK LIST

1. SPECIFICATIONS ---------- Page 2

2. DIMENSION ---------- Page 3

3. FAI & CPK TEST ---------- Page 4~5

4. NOTES ---------- Page 6

5.Declaration of RoHS ---------- Page 7

SUNONWEALTH ELECTRIC MACHINE INDUSTRY CO., LTD. 建準電機工業股份有限公司	**PAGE**	**1 OF 7**
	SPEC. NO.	**C01000460F-01**
	ISSUED DATE	**09. 05. 2011**
	EDITION	**1**
	REVISION DATE	**11. 08. 2011**

建準電機工業(股)公司 研發部
2011.11.09
發行章

MODEL : SA000-11009

1.SPECIFICATIONS

1. Application	N/A
2. Heat Sink Dimension	∮85X80 HF
3. Heat Sink Material	AL6063(陽極原色)
4. Cooling Method	N/A
5. Thermal Grease / PAD	N/A
6. Fan Dimension	N/A
7. Fan Speed (with Heat Sink)	N/A
8. Fan Airflow (with Heat Sink)	N/A
9. Fan Rating Voltage	N/A
10. Fan Rating Current (with Heat Sink)	N/A
11. Fan Power Consumption (with Heat Sink)	N/A
12. Fan Bearing Type	N/A
13. Fan Connector	N/A
14. Cooling Module Noise	N/A
15. Fan Operating Voltage Range	N/A
16. Operating Temperature	-10 to + 70 deg. C
17. Storage Temperature	-40 to + 70 deg. C
18. Weight	370 g
19. Life Expectance	N/A

建準電機工業(股)公司 研發部 2011.11.09 發行章

2.DIMENSION

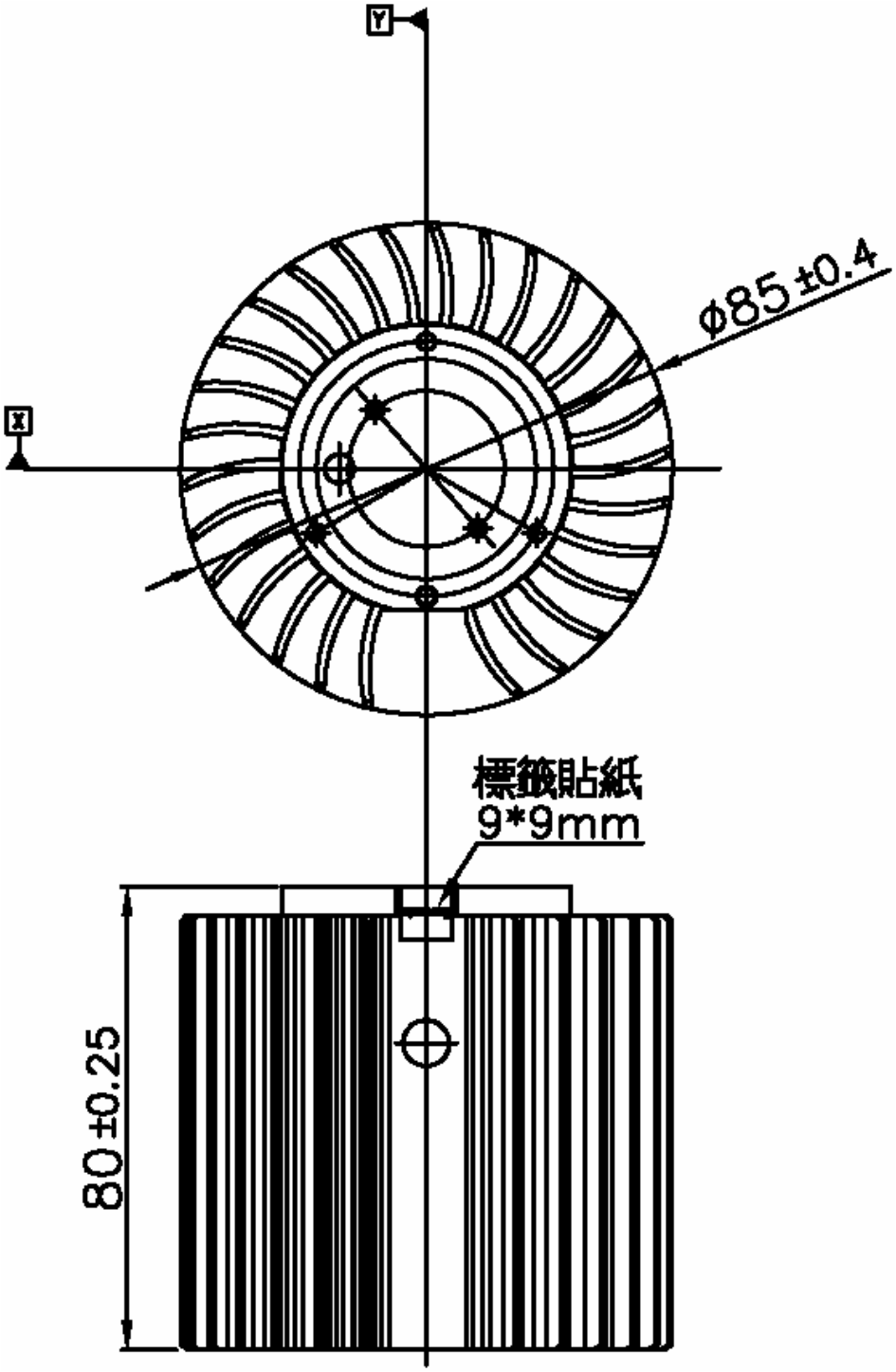

建準電機工業(股)公司 研發部 2011.11.09 發行章

2.CPK TEST

[illegible]

No	1	2
[illegible]	[illegible]	[illegible]
[illegible]	80.000	38.000
[illegible]	80.250	38.100
[illegible]	79.750	37.900
UNIT (mm)	mm	mm
ave	80.138	38.041
max	80.209	38.065
min	80.054	38.001
1	[illegible]	[illegible]
2	[illegible]	[illegible]
3	[illegible]	[illegible]
4	[illegible]	[illegible]
5	[illegible]	[illegible]
6	80.156	38.056
7	80.135	38.035
8	80.135	38.065
9	80.147	38.047
10	80.137	38.057
11	80.126	38.036
12	80.146	38.026
13	80.128	38.046
14	80.156	38.056
15	80.126	38.026
16	80.201	38.001
17	80.153	38.053
18	80.135	38.035
19	80.135	38.025
20	80.158	38.058
21	80.138	38.038
22	80.125	38.059
23	80.135	38.035
24	80.126	38.026
25	80.125	38.045
26	80.136	38.046
27	80.129	38.029
28	80.109	38.029
29	80.119	38.039
30	80.152	38.052
31	80.209	38.009
32	80.156	38.056
33	80.145	38.045
34	80.118	38.028
35	80.129	38.038

建準電機工業(股)公司 研發部 2011.11.09 發行章

3.FAI & CPK TEST

品質總合確認書DATA SHEET

發條名：SA000 11000(Seeger 8580)

NO	項目	規格	平均值 avg	標準偏差 σ	最大值 max	最小值 min	試料數	工程能力 cp	工程能力 cpk	備考
1	總高度	79.750~80.250mm	80.138	0.035	80.209	80.054	35	3.337	1.490	
2	內徑	37.900~38.100mm	38.047	0.014	38.065	38.000	35	2.313	1.371	

建準電機工業(股)公司 研發部 2011.11.09 發行章

Notes

I. SPECIFICATION MODIFICATION

1. SUNON offers engineering assistance on module installation and cooling system design.
2. All changes, modifications and/or revisions to the specifications, if any, are incorporated in the attached specifications.
3. No changes, modifications and/or revisions to these specifications are effective absent agreement, by both Sunon and the customer, in writing.
4. This module will be shipped in accordance with the attached specification unless SUNON and the customer have agreed otherwise, in writing, as specificied in Paragraph 3, above.

II. OTHER

1. DO NOT operate this module in proximity to hazardous materials such as organic silicon, cyanogens, formalin, phenol, or corrosive gas environments including, but not limited to, H_2S, SO_2, NO_2, or Cl_2.
2. Unless otherwise noted, all testing of this module is conducted at 25°C ambient temperature and sixty-five percent (65%) relative humidity.
3. DO NOT store this module in an environment with high humidity. This module must be stored in accordance with the attached specifications regarding storage temperature. If this module is stored for more than 6 months, SUNON recommends functional testing before using.
4. SUNON reserves the right to use components from multiple sources at its discretion. The use of components from other sources will not affect the specifications as described herein.

II. WARRANTY

This module is warranted against all defects which are proved to be fault in our workmanship and material for one year from the date of our delivery. The sole responsibility under the warranty shall be limited to the repair of the module or the replacement thereof, at SUNON's sole discretion. SUNON will not be responsible for the failures of its module due to improper handing, misuse or the failure to follow specifications or instructions for use. In the event of warranty claim, the customer shall immediately notify SUNON for verification. SUNON will not be responsible for any consequential damage to the customer's equipment as a result of any module proven to be defective.

建準電機工業(股)公司 研發部 2011.11.09 發行章

Declaration of Restricted Materials

Control declaration of environment- related substances/ materials

1. In accordance with the Restriction of Hazardous Substances (RoHS) Directive and specific market requirements, Sunon Halogen-Free Product have complied with law and discipline not to employ the forbidden substances, and restrict the allowable concentration of some limited substances deliberately in our components.

No	Substance		Criteria
1	CFCs & HCFCs (ozone depleting substances)		Forbidden
2	Chlorinated Organic Solvent		Forbidden
3	Lead and its compounds	Plastic (Frame, Impeller, wire harness, etc.)	<100ppm
		Solder	<1000ppm
		Steel alloy	<3500ppm
		Aluminium alloy	<4000ppm
		Copper alloy	<4wt%
4	Cadmium and its compounds	Solder	<20ppm
		Parts composed of metals containing zinc (e.g. brass, zinc for die casting)	<100ppm
		Plastic	<5ppm
5	PBBs and PBDEs		Forbidden
6	PCB and PCT		Forbidden
7	CP, Short-chain Chlorinated paraffins C10-13, Cl ≥48 wt%		Forbidden
8	Mirex		Forbidden
9	PCN		Forbidden
10	Hexavalent Chromium compounds		<100ppm
11	Mercury and its compounds		Forbidden
12	Asbestos		Forbidden
13	Organic Tin compounds		Forbidden
14	Azo compounds		Forbidden
15	TBBP-A in external case plastic parts of products (PCB is exempted)		<1000ppm
16	Nickel in external case parts, which are likely to result in prolonged skin exposure		<1000ppm
17	Halogen-Free Product: Brominated/chlorinated flame retardants (other than PBBs or PBDEs), applicatable item: frame, bobbin, impeller, lear wire, connector, mylar insulator.		Br<900ppm Cl<900ppm Br+Cl<1500ppm
18	PAHs and its 16 compounds in unusual contact material		BaP < 20ppm 16 compounds total content < 200ppm
19	PCB and electroplating material, PFOS content complianced with 2006/122/EC		PFOS <1000ppm; coating material PFOS < 1μg/m 2

建準電機工業(股)公司 研發部 2011.11.09 發行章