SUNON

SPECIFICATION FOR APPROVAL

MODEL NO	:	**SA000-12028**
DESCRIPTION	:	**Thermal Module**
DIMENSIONS	:	**§85X88.4 mm**
SUNON SPEC. NO.	:	**C01000950F-01**
CUSTOMER APPROVAL NO.	:	
APPROVED BY CUSTOMER (AUTHORIZED)	:	

DRAWN	CHECKED	APPROVED	SPEC. NO	C01000950F-01
Anne	Amy	Eric	ISSUED DATE	07. 04. 2012
			EDITION	0
			REVISION DATE	

建準電機工業股份有限公司
SUNONWEALTH ELECTRIC MACHINE INDUSTRY CO., LTD.
NO. 30, LN. 296, XINYA RD., QIANZHEN DIST., TEL:886-7-8135888
KAOHSIUNG CITY 80673, TAIWAN (R.O.C) FAX:886-7-8230505/8230606/8231010
URL:http://www.sunon.com E-mail: sunon@email.sunon.com.tw

SPECIFICATION FOR APPROVAL

CHECK LIST

1. SPECIFICATIONS ---------- Page 2

2. DIMENSION ---------- Page 3

3. CPK TEST ---------- Page 4~5

4. NOTES ---------- Page 6

5. Declaration of RoHS ----------Page 7

建準電機工業(股)公司 研發部 2012.07.04 發行章

MODEL : SA000-12028

1.SPECIFICATIONS

1. Application	N/A
2. Heat Sink Dimension	ϕ 85 X 88.4 HF
3. Heat Sink Material	AL6063(陽極黑色)
4. Cooling Method	N/A
5. Thermal Grease / PAD	N/A
6. Fan Dimension	N/A
7. Fan Speed (with Heat Sink)	N/A
8. Fan Airflow (with Heat Sink)	N/A
9. Fan Rating Voltage	N/A
10. Fan Rating Current (with Heat Sink)	N/A
11. Fan Power Consumption (with Heat Sink)	N/A
12. Fan Bearing Type	VAPO
13. Fan Connector	N/A
14. Cooling Module Noise	N/A
15. Fan Operating Voltage Range	N/A
16. Operating Temperature	-10 to + 70 deg. C
17. Storage Temperature	-40 to + 70 deg. C
18. Weight	356 g
19. Life Expectance	N/A

建準電機工業(股)公司 研發部 2012.07.04 發行章

2.DIMENSION

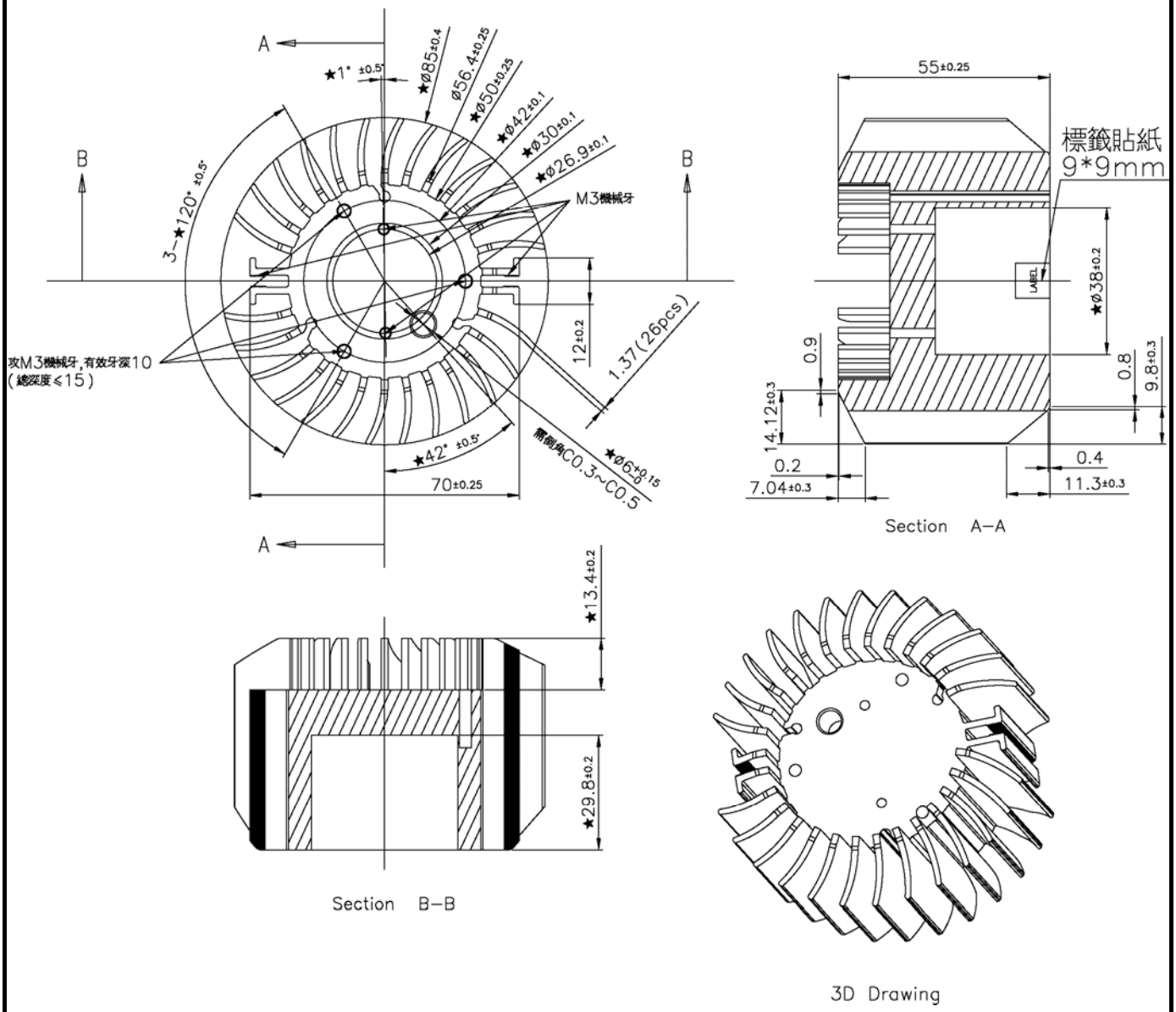

SUNONWEALTH ELECTRIC MACHINE INDUSTRY CO., LTD. 建準電機工業股份有限公司	PAGE	3 OF 7
	SPEC. NO.	C01000950F-01
	ISSUED DATE	07. 04. 2012
	EDITION	0
	REVISION DATE	

建準電機工業股份有限公司
研 發
2012.07.04
發 行 章

3. CPK TEST

1. CPK TEST

機種名：SA000-12028(Seeger KK85H88-4-B)　　試產日期：2012/6/28

No	1	2
(項目)	總高度	內徑
規格中心值	88.400	38.000
規格上限	88.650	38.200
規格下限	88.150	37.800
UNIT (單位)	mm	mm
ave	88.467	38.057
max	88.526	38.166
min	88.428	38.029
1	88.526	38.038
2	88.448	38.048
3	88.435	38.053
4	88.447	38.036
5	88.437	38.054
6	88.526	38.056
7	88.446	38.035
8	88.428	38.065
9	88.453	38.047
10	88.436	38.057
11	88.446	38.036
12	88.456	38.166
13	88.435	38.046
14	88.456	38.056
15	88.526	38.046
16	88.435	38.101
17	88.501	38.053
18	88.453	38.035
19	88.435	38.125
20	88.526	38.058
21	88.525	38.038
22	88.436	38.059
23	88.429	38.035
24	88.435	38.126
25	88.458	38.045
26	88.438	38.046
27	88.525	38.029
28	88.509	38.029
29	88.519	38.039
30	88.452	38.052
31	88.509	38.109
32	88.456	38.056
33	88.445	38.045
34	88.518	38.048
35	88.429	38.038

建準電機工業(股)公司 研發部 2012.07.04 發行章

3. CPK TEST

品質總合確認書DATA SHEET

機種名：SA000-12028(Seeger KK85H88-4-B)

NO	項目	規格	平均值 avg	標准偏差σ	最大值max	最小值 min	試料數	工程能力 cp	cpk	備考
1	總高度	88.150~88.650mm	88.467	0.037	88.526	88.428	35	2.241	1.643	
2	內徑	37.800~38.200mm	38.057	0.031	38.166	38.029	35	2.164	1.544	

建準電機工業(股)公司 研發部 2012.07.04 發行章

Notes

I. SPECIFICATION MODIFICATION

1. SUNON offers engineering assistance on module installation and cooling system design.
2. All changes, modifications and/or revisions to the specifications, if any, are incorporated in the attached specifications.
3. No changes, modifications and/or revisions to these specifications are effective absent agreement, by both Sunon and the customer, in writing.
4. This module will be shipped in accordance with the attached specification unless SUNON and the customer have agreed otherwise, in writing, as specificied in Paragraph 3, above.

II. OTHER

1. DO NOT operate this module in proximity to hazardous materials such as organic silicon, cyanogens, formalin, phenol, or corrosive gas environments including, but not limited to, H_2S, SO_2, NO_2, or Cl_2.
2. Unless otherwise noted, all testing of this module is conducted at 25°C ambient temperature and sixty-five percent (65%) relative humidity.
3. DO NOT store this module in an environment with high humidity. This module must be stored in accordance with the attached specifications regarding storage temperature. If this module is stored for more than 6 months, SUNON recommends functional testing before using.
4. SUNON reserves the right to use components from multiple sources at its discretion. The use of components from other sources will not affect the specifications as described herein.

III. WARRANTY

This module is warranted against all defects which are proved to be fault in our workmanship and material for one year from the date of our delivery. The sole responsibility under the warranty shall be limited to the repair of the module or the replacement thereof, at SUNON's sole discretion. SUNON will not be responsible for the failures of its module due to improper handing, misuse or the failure to follow specifications or instructions for use. In the event of warranty claim, the customer shall immediately notify SUNON for verification. SUNON will not be responsible for any consequential damage to the customer's equipment as a result of any module proven to be defective.

建準電機工業(股)公司 研發部 2012.07.04 發行章

Declaration of Restricted Materials

Control declaration of environment- related substances/ materials

1. In accordance with the Restriction of Hazardous Substances (RoHS) Directive and specific market requirements, Sunon Halogen-Free Product have complied with law and discipline not to employ the forbidden substances, and restrict the allowable concentration of some limited substances deliberately in our components.

No	Substance		Criteria
1	CFCs & HCFCs (ozone depleting substances)		Forbidden
2	Chlorinated Organic Solvent		Forbidden
3	Lead and its compounds	Plastic (Frame, Impeller, wire harness, etc.)	<100ppm
		Solder	<1000ppm
		Steel alloy	<3500ppm
		Aluminium alloy	<4000ppm
		Copper alloy	<4wt%
4	Cadmium and its compounds	Solder	<20ppm
		Parts composed of metals containing zinc (e.g. brass, zinc for die casting)	<100ppm
		Plastic	<5ppm
5	PBBs and PBDEs		Forbidden
6	PCB and PCT		Forbidden
7	CP, Short-chain Chlorinated paraffins C10-13, Cl ≥48 wt%		Forbidden
8	Mirex		Forbidden
9	PCN		Forbidden
10	Hexavalent Chromium compounds		<100ppm
11	Mercury and its compounds		Forbidden
12	Asbestos		Forbidden
13	Organic Tin compounds		Forbidden
14	Azo compounds		Forbidden
15	TBBP-A in external case plastic parts of products (PCB is exempted)		<1000ppm
16	Nickel in external case parts, which are likely to result in prolonged skin exposure		<1000ppm
17	Halogen-Free Product: Brominated/chlorinated flame retardants (other than PBBs or PBDEs), applicatable item: frame, bobbin, impeller, lear wire, connector, mylar insulator.		Br<900ppm Cl<900ppm Br+Cl<1500ppm
18	PAHs and its 16 compounds in unusual contact material		BaP < 20ppm 16 compounds total content < 200ppm
19	PCB and electroplating material, PFOS content complianced with 2006/122/EC		PFOS <1000ppm; coating material PFOS < 1μg/m 2

建準電機工業(股)公司 研發部 2012.07.04 發行章