GOOD-ARK SEMICONDUCTOR

SSF0115

100V N-Channel MOSFET

Main Product Characteristics

V_{DSS}	100V
$R_{DS(on)}$	0.15 Ω(typ)
I_D	3A

SOT-223

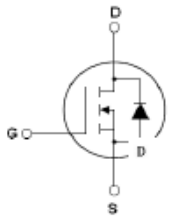

Schematic Diagram

Description

The SSF0115 is a new generation of high voltage and low current N–Channel enhancement mode trench power MOSFET. This new technology increases the device reliability and electrical parameter repeatability.

Features and Benifits

- Advanced trench process technology
- Avalanche energy, 100% tested
- Fully characterized avalanche voltage and current

Application

- IEEE802.3AF Compatible

Absolute Maximum Ratings

Symbol	Parameter	Max.	Units
I_D@T_c=25°C	Continuous Drain Current,V_{GS}@10V	3	A
I_D@T_c=100°C	Continuous Drain Current,V_{GS}@10V	2.3	
I_{DM}	Pulsed Drain Current ①	12	
P_D@T_C=25°C	Power Dissipation	2.1	W
	Linear Derating Factor	0.019	W/°C
V_{GS}	Gate-to-Source Voltage	±20	V
E_{AS}	Single pulse Avalanche Energy ②	79	mJ
T_J T_{STG}	Operating Junction and Storage Temperature Range	–55 to +175	°C

Thermal Resistance

Symbol	Parameter	Min.	Typ.	Max.	Units
$R_{\theta JA}$	Junction-to-Ambient	—	—	69	°C/W

*When mounted on the minimum pad size recommended（PCB Mount）

Electrical Characteristics (T_J=25 °C unless otherwise specified)

Sym.	Parameter	Min.	Typ.	Max.	Units	Test Conditions
BV_{DSS}	Drain-to-Source Breakdown Voltage	100	—	—	V	V_{GS}=0V,I_D=250μA
$R_{DS(on)}$	Static Drain-to-Source On-resistance	—	0.09	0.15	Ω	V_{GS}=10V,I_D=2A
$V_{GS(th)}$	Gate Threshold Voltage	2.0	—	4.0	V	V_{DS}=V_{GS},I_D=250μA
I_{DSS}	Drain-to-Source Leakage Current	—	—	1	μA	V_{DS}=30V,V_{GS}=0V
		—	—	10		V_{DS}=100V, V_{GS}=0V,T_J=150°C
I_{GSS}	Gate-to-Source Forward Leakage	—	—	100	nA	V_{GS}=20V
	Gate-to-Source reverse Leakage	—	—	-100		V_{GS}=-20V
Q_g	Total Gate Charge	—	18	22	nC	I_D=9.2A,V_{GS}= 1 0 V V_{DD}=80V,R_L=8.6Ω
Q_{gs}	Gate-to-Source Charge	—	2.7	—		
Q_{gd}	Gate-to-Drain("Miller") Charge	—	7.8	—		
$t_{d(on)}$	Turn-on Delay Time	—	12	40	nS	V_{DD}=50V I_D=9.2A ,R_L=5.4Ω R_G=18Ω V_{GS}=10V
t_r	Rise Time	—	12	40		
$t_{d(off)}$	Turn-Off Delay Time	—	33	85		
t_f	Fall Time	—	26	68		
C_{iss}	Input Capacitance	—	350	480	pF	V_{GS}=0V V_{DS}=25V f=1.0MHZ
C_{oss}	Output Capacitance	—	90	110		
C_{rss}	Reverse Transfer Capacitance	—	35	45		

Source-Drain Ratings and Characteristics

Sym.	Parameter	Min.	Typ.	Max.	Units	Test Conditions
I_S	Continuous Source Current (Body Diode)	—	—	3	A	MOSFET symbol showing the integral reverse p-n junction diode. 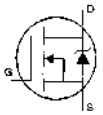
I_{SM}	Pulsed Source Current (Body Diode) ①	—	—	18		
V_{SD}	Diode Forward Voltage	—	—	1.3	V	T_J=25°C ,I_S=3A,V_{GS}=0V ③
t_{rr}	Reverse Recovery Time	—	98	—	nS	T_J=25°C ,I_F=9.2A di/dt=100A/μs ③
Q_{rr}	Reverse Recovery Charge	—	0.34	—	μC	
t_{on}	Forward Turn-on Time	Intrinsic turn-on time is negligible (turn-on is dominated by L_S + L_D)				

Notes:

① Repetitive rating; pulse width limited by max junction temperature.

② Test condition: L =30mH, V_{DD} = 50V,I_d=2.3A

③ Pulse width≤300μS, duty cycle≤1.5% ; R_G = 25Ω Starting T_J = 25°C

Test Circuits and Waveforms

E_{AS} Test Circuit

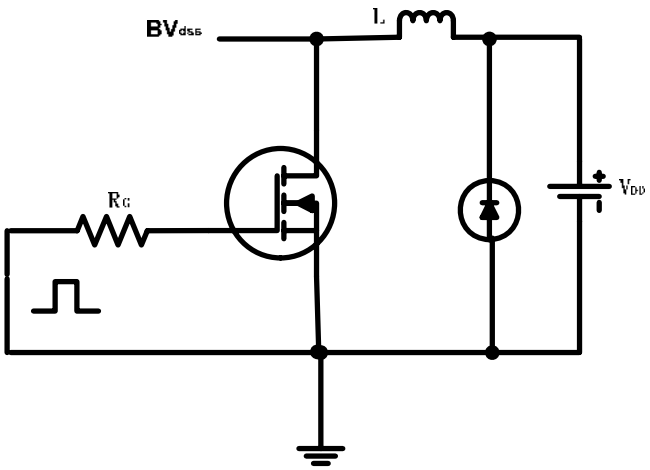

Gate Charge Test Circuit

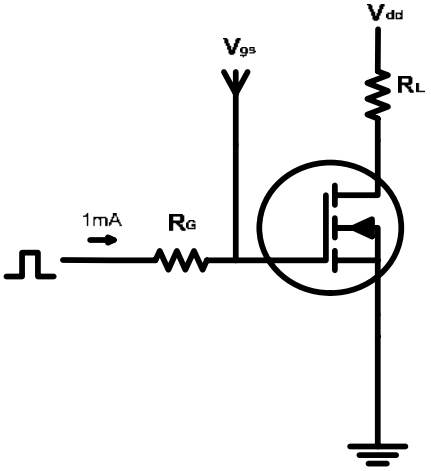

Switching Time Test Circuit

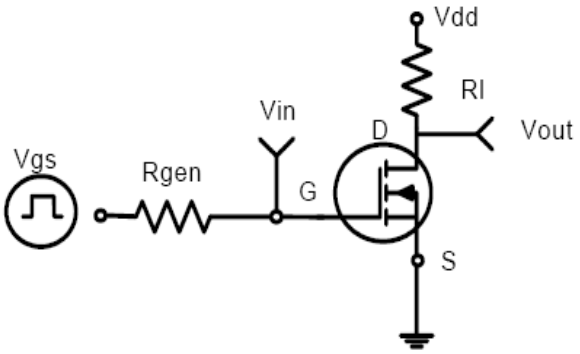

Switching Waveform

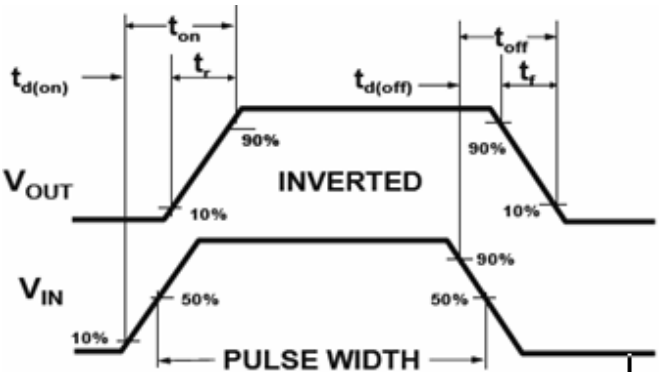

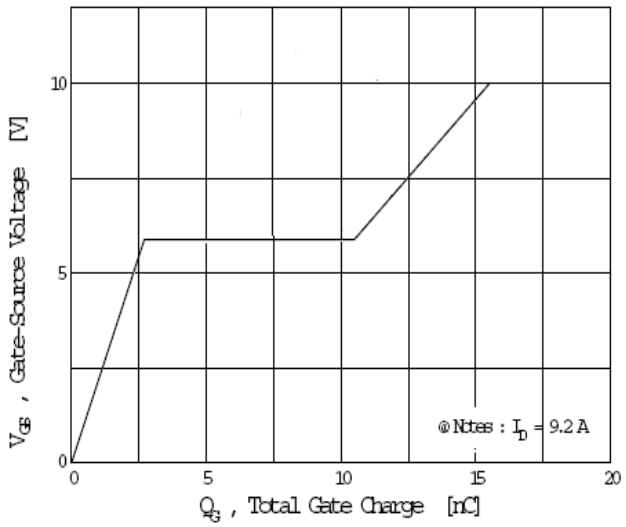

Gate Source Voltage vs Total Gate Charge

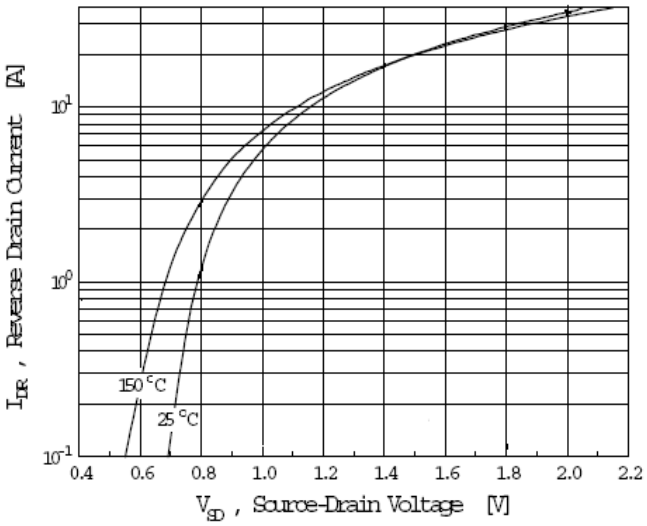

Source-Drain Diode Forward Voltage

Typical Electrical and Thermal Characteristics

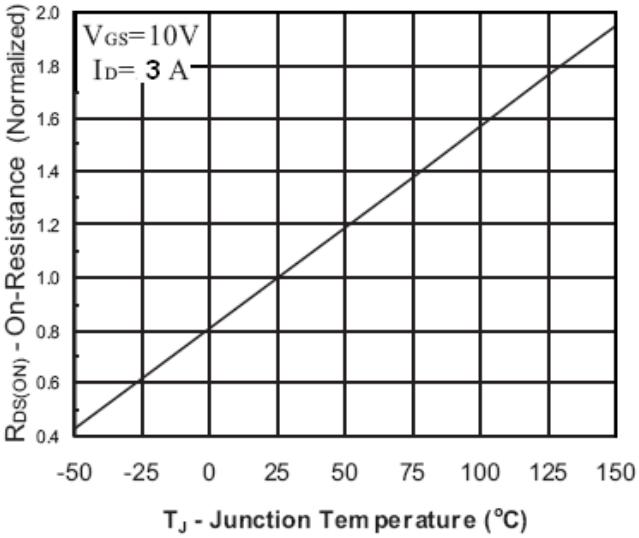

On Resistance vs Junction Temperature

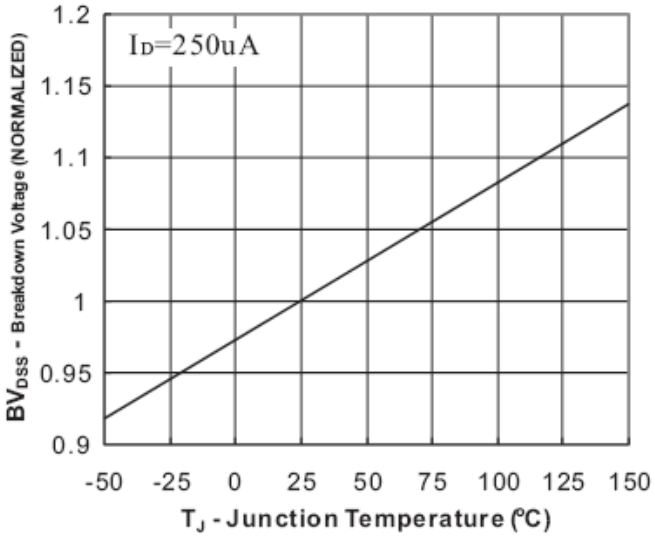

Breakdown Voltage vs Junction Temperature

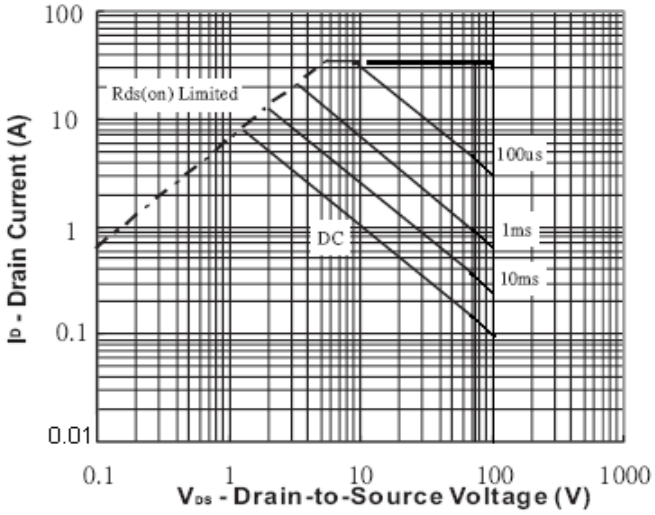

Safe Operation Area

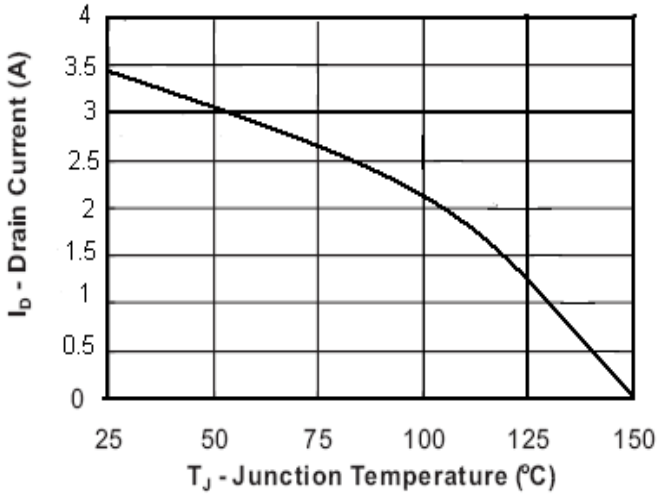

Max Drain Current vs Junction Temperature

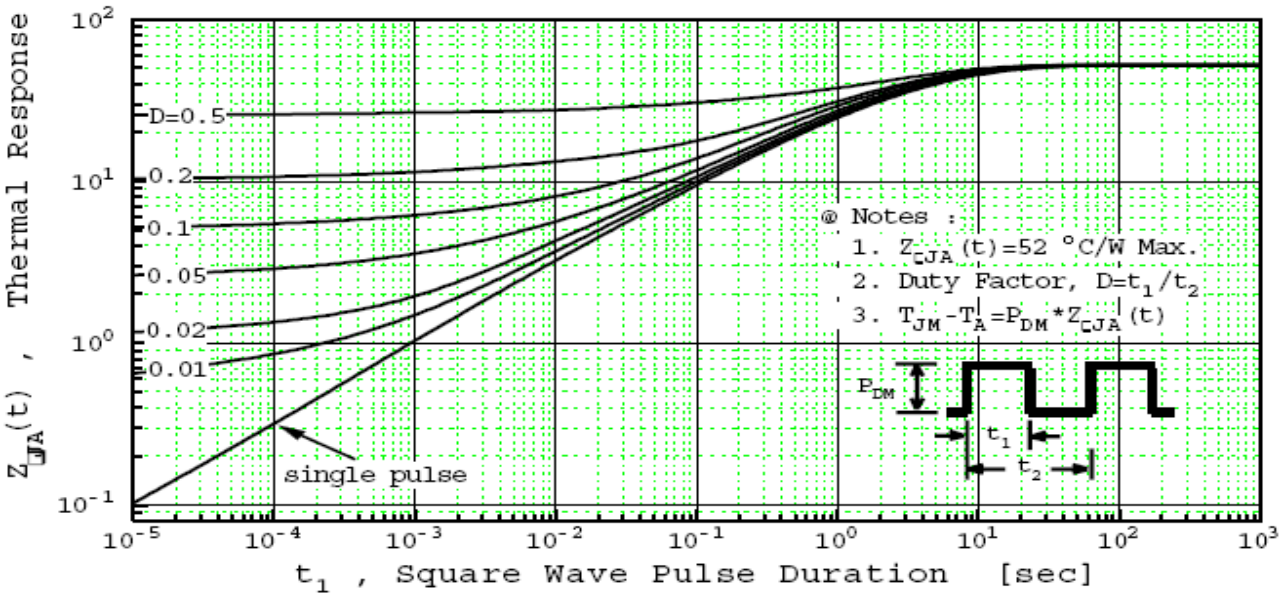

Transient Thermal Impedance Curve

SOT-223 MECHANICAL DATA

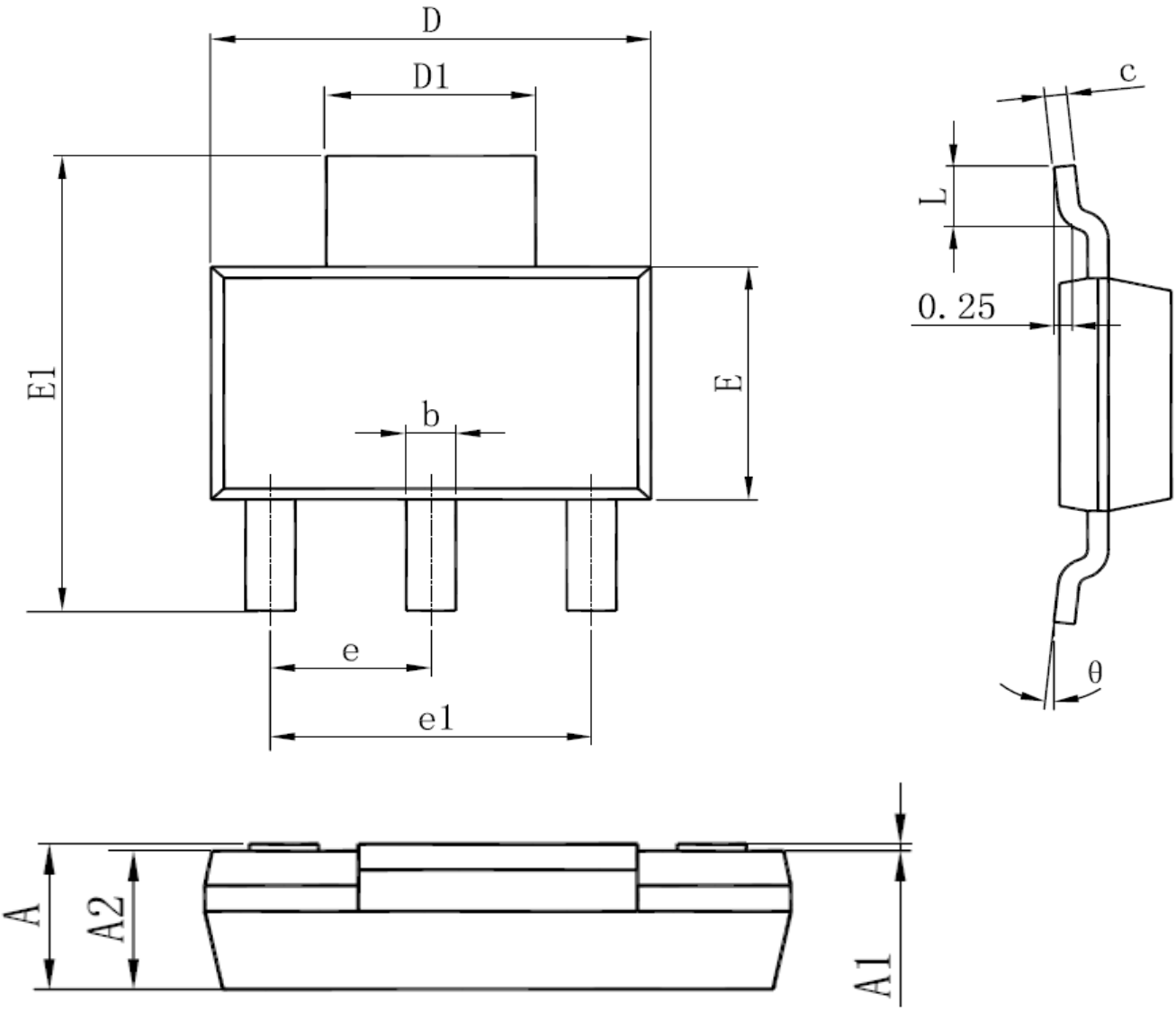

Symbol	Dimensions In Millimeters		Dimensions In Inches	
	Min	Max	Min	Max
A	1.520	1.800	0.060	0.071
A1	0.000	0.100	0.000	0.004
A2	1.500	1.700	0.059	0.067
b	0.660	0.820	0.026	0.032
c	0.250	0.350	0.010	0.014
D	6.200	6.400	0.244	0.252
D1	2.900	3.100	0.114	0.122
E	3.300	3.700	0.130	0.146
E1	6.830	7.070	0.269	0.278
e	2.300(BSC)		0.091(BSC)	
e1	4.500	4.700	0.177	0.185
L	0.900	1.150	0.035	0.045
θ	0°	10°	0°	10°