GOOD-ARK SEMICONDUCTOR

SSF03N80R

800V N-Channel MOSFET

Main Product Characteristics

V_{BDSS}	800V
$R_{DS(on)}$	4.2Ω
I_D	3A

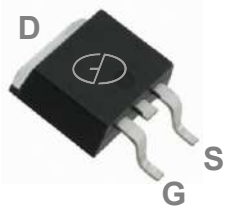

TO-252

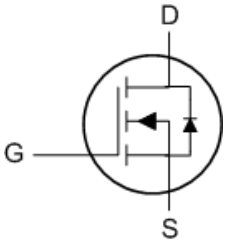

Schematic Diagram

Features and Benefits

- Advanced MOSFET process technology
- Ideal for battery operated systems, load switching, power converters and other general purpose applications
- Low on-resistance with low gate charge
- Fast switching and reverse body recovery

Description

The SSF03N80R utilizes the latest techniques to achieve high cell density, low on-resistance and high repetitive avalanche rating. These features make this device extremely efficient and reliable for use in high efficiency switch mode power supply and a wide variety of other applications.

Absolute Maximum Ratings (T_C=25°C unless otherwise specified)

Parameter	Symbol	Rating	Units
Drain-Source Voltage	V_{DS}	800	V
Gate-Source Voltage	V_{GS}	±30	V
Drain Current – Continuous (T_C=25°C)	I_D	3	A
Drain Current – Continuous (T_C=100°C)		1.9	A
Drain Current – Pulsed[1]	I_{DM}	12	A
Single Pulse Avalanche Energy[2]	E_{AS}	283	mJ
Single Pulse Avalanche Current[2]	I_{AS}	3	A
Power Dissipation (T_C=25°C)	P_D	94	W
Power Dissipation – Derate above 25°C	P_D	0.75	W/°C
Storage Temperature Range	T_{STG}	-55 to +150	°C
Operating Junction Temperature Range	T_J	-55 to +150	°C

Thermal Characteristics

Parameter	Symbol	Typ.	Max.	Unit
Thermal Resistance Junction to Ambient	$R_{\theta JA}$	---	62	**°C** W
Thermal Resistance Junction to Case	$R_{\theta JC}$	---	1.33	°C /W

Electrical Characteristics (T_J=25°C unless otherwise specified)

Parameter	Symbol	Conditions	Min.	Typ.	Max.	Unit
Off Characteristics						
Drain-Source Breakdown Voltage	BV_{DSS}	V_{GS}=0V , I_D=250uA	800	---	---	V
Drain-Source Leakage Current	I_{DSS}	V_{DS}=800V , V_{GS}=0V , T_J=25℃	---	---	10	uA
		V_{DS}=640V , V_{GS}=0V , T_J=100℃	---	---	100	uA
Gate-Source Leakage Current	I_{GSS}	V_{GS}=±30V , V_{DS}=0V	---	---	±100	nA
On Characteristics						
Static Drain-Source On-Resistance	$R_{DS(ON)}$	V_{GS}=10V , I_D=1.5A	---	3.36	4.2	Ω
Gate Threshold Voltage	$V_{GS(th)}$	V_{GS}=V_{DS} , I_D =250uA	2	---	4	V
Forward Transconductance	gfs	V_{DS}=30V , I_D=1.5A	---	3.7	---	S
Dynamic and Switching Characteristics						
Total Gate Charge[3,4]	Q_g	V_{DS}=640V , V_{GS}=10V , I_D=3A	---	19	---	nC
Gate-Source Charge[3,4]	Q_{gs}		---	4	---	
Gate-Drain Charge[3,4]	Q_{gd}		---	7.6	---	
Turn-On Delay Time[3,4]	$T_{d(on)}$	V_{DD}=400V , V_{GS}=10V , R_G=25W I_D=3A	---	48	---	ns
Rise Time[3,4]	T_r		---	36	---	
Turn-Off Delay Time[3,4]	$T_{d(off)}$		---	106	---	
Fall Time[3,4]	T_f		---	41	---	
Input Capacitance	C_{iss}	V_{DS}=25V , V_{GS}=0V , F=1MHz	---	696	---	pF
Output Capacitance	C_{oss}		---	65	---	
Reverse Transfer Capacitance	C_{rss}		---	10.2	---	
Drain-Source Diode Characteristics and Maximum Ratings						
Continuous Source Current	I_S	V_G=V_D=0V , Force Current	---	---	3	A
Pulsed Source Current	I_{SM}		---	---	6	A
Diode Forward Voltage	V_{SD}	V_{GS}=0V , I_S=1A , T_J=25℃	---	---	1.5	V
Reverse Recovery Time[3]	t_{rr}	V_{GS}=0V,I_S=3A , dI/dt=100A/μs	---	372	---	nS
Reverse Recovery Charge[3]	Q_{rr}	T_J=25℃	---	1.8	---	uC

Notes :

1. Repetitive Rating : Pulsed width limited by maximum junction temperature.
2. V_{DD}=50V,V_{GS}=10V,L=59mH,I_{AS}=3A.,R_G=25Ω,Starting T_J=25℃.
3. The data tested by pulsed , pulse width ≦ 300us , duty cycle ≦ 2%.
4. Essentially independent of operating temperature.

Typical Electrical and Thermal Characteristics

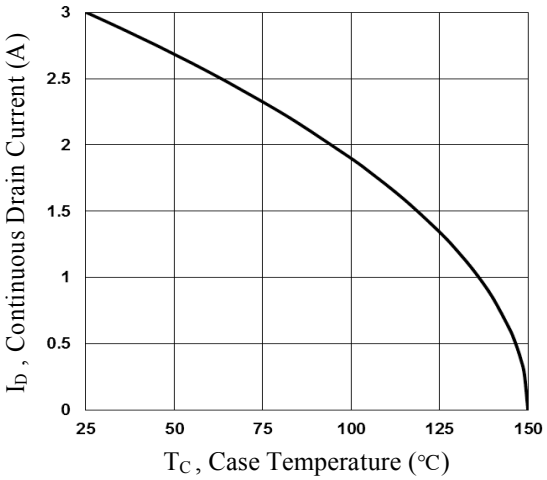

Fig.1 Continuous Drain Current vs. T_C

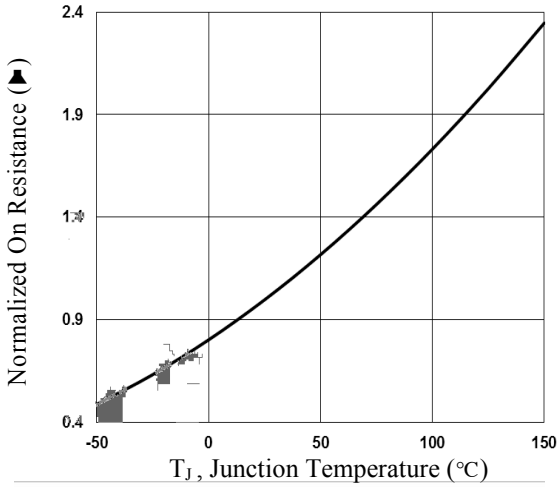

Fig.2 Normalized RDSON vs. T_J

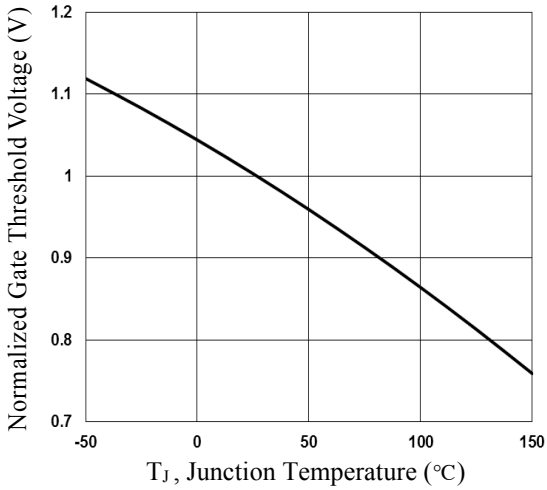

Fig.3 Normalized V_{th} vs. T_J

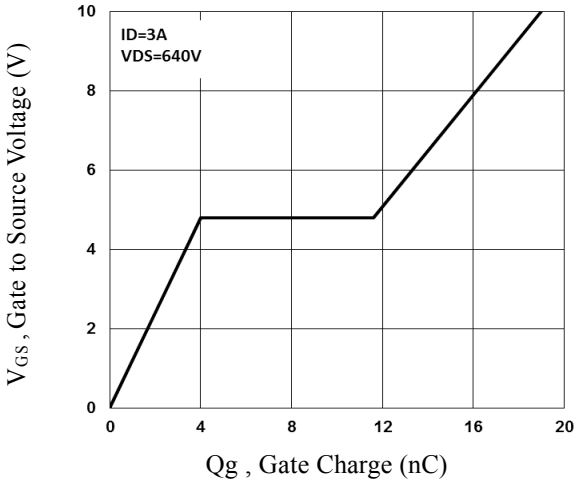

Fig.4 Gate Charge Waveform

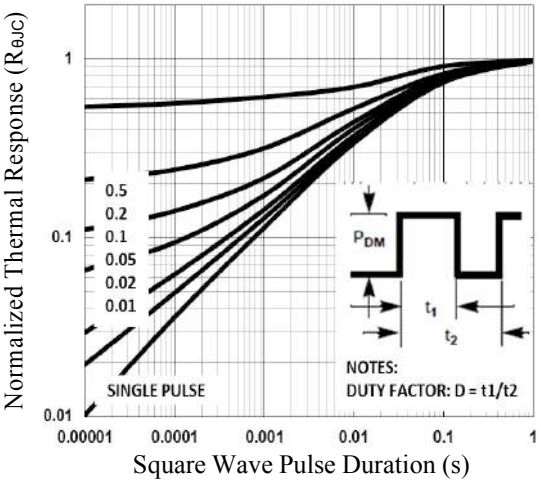

Fig.5 Normalized Transient Impedance

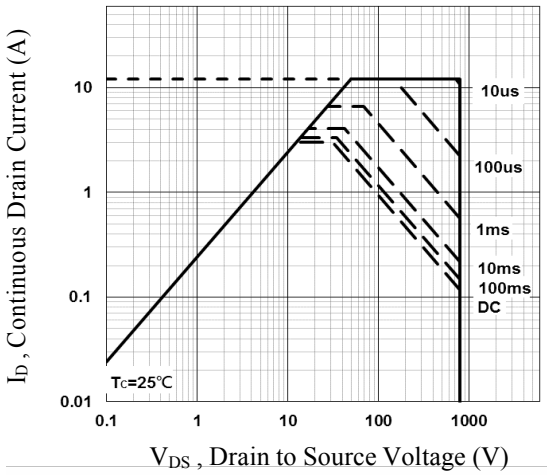

Fig.6 Maximum Safe Operation Area

Typical Electrical and Thermal Characteristics

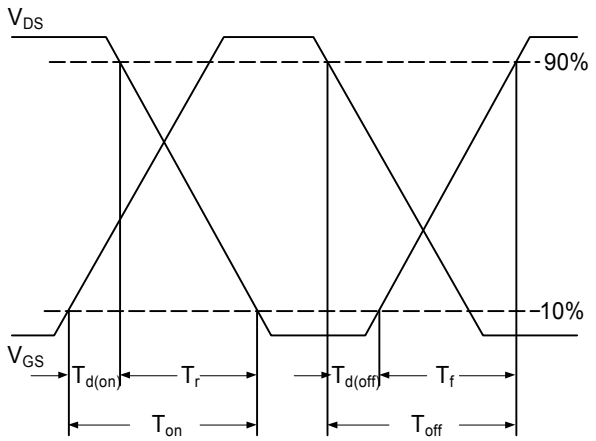

Fig.7 Switching Time Waveform

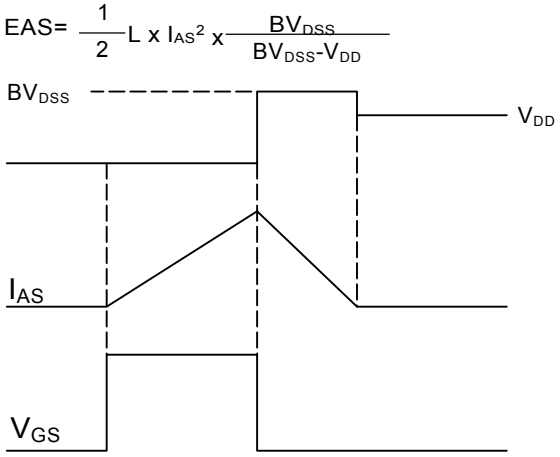

Fig.8 EAS Waveform

Package Outline Dimensions TO-252

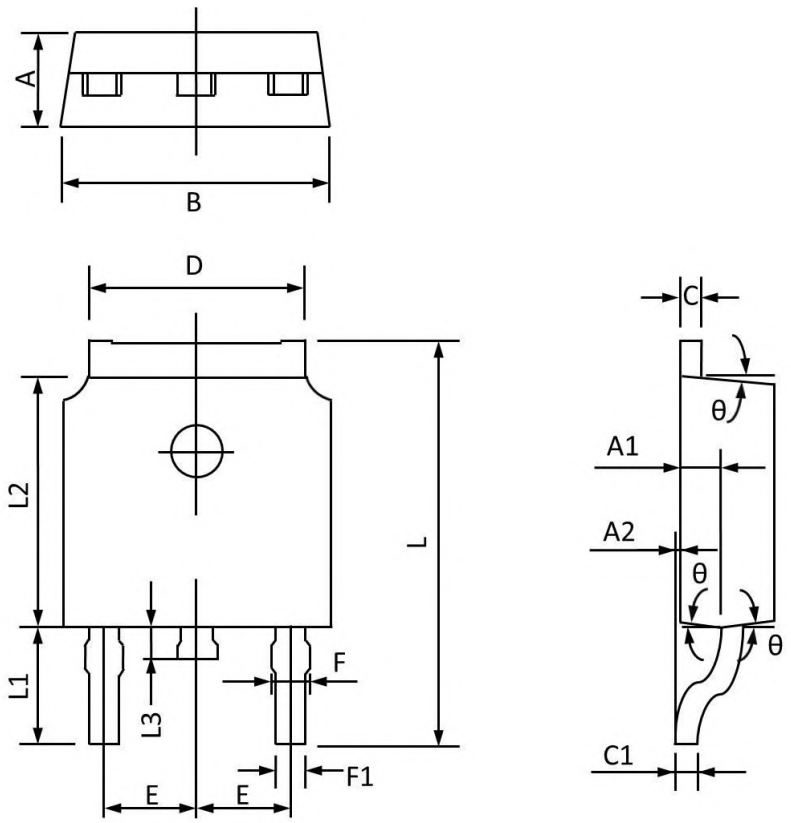

Symbol	Dimensions In Millimeters		Dimensions In Inches	
	Min	Max	Min	Max
A	2.20	2.40	0.087	0.094
A1	0.91	1.11	0.036	0.044
A2	0.00	0.15	0.000	0.006
B	6.50	6.70	0.256	0.264
C	0.46	0.580	0.018	0.230
C1	0.46	0.580	0.018	0.030
D	5.10	5.46	0.201	0.215
E	2.186	2.386	0.086	0.094
F	0.74	0.94	0.029	0.037
F1	0.660	0.860	0.026	0.034
L	9.80	10.40	0.386	0.409
L1	2.9REF		0.114REF	
L2	6.00	6.20	0.236	0.244
L3	0.60	1.00	0.024	0.039
θ	3°	9°	3°	9°