SSF11NS65U

650V N-Channel MOSFET

Main Product Characteristics

V_{DSS}	650V
$R_{DS(on)}$	0.32Ω (typ.)
I_D	11A

TO-220

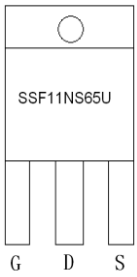

Marking and Pin Assignment

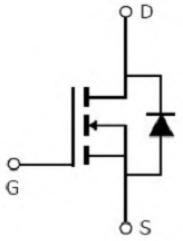

Schematic Diagram

Features and Benefits

- High dv/dt and avalanche capabilities
- 100% avalanche tested
- Low input capacitance and gate charge
- Low gate input resistance

Description

The SSF11NS65U combines an innovative super junction technology and advanced process. This technology achieves low R_{dson}, energy savings, high reliability and uniformity, superior power density and space saving.

Absolute Max Ratings

Symbol	Parameter	Max.	Units
I_D @ T_C = 25°C	Continuous Drain Current, V_{GS} @ 10V①	11	A
I_D @ T_C = 100°C	Continuous Drain Current, V_{GS} @ 10V①	7	
I_{DM}	Pulsed Drain Current②	44	
P_D @T_C = 25°C	Power Dissipation③	83	W
	Linear Derating Factor	0.66	W/°C
V_{DS}	Drain-Source Voltage	650	V
V_{GS}	Gate-to-Source Voltage	± 30	V
E_{AS}	Single Pulse Avalanche Energy @ L=133mH	250	mJ
I_{AS}	Avalanche Current @ L=133mH	1.94	A
T_J, T_{STG}	Operating Junction and Storage Temperature Range	-55 to +150	°C

Thermal Resistance

Symbol	Characteristics	Typ.	Max.	Units
$R_{\theta JC}$	Junction-to-Case③	—	1.5	°C/W
$R_{\theta JA}$	Junction-to-Ambient (t ≤ 10s) ④	—	62	°C/W

Electrical Characteristics @T_A=25°C unless otherwise specified

Symbol	Parameter	Min.	Typ.	Max.	Units	Conditions
$V_{(BR)DSS}$	Drain-to-Source Breakdown Voltage	650	—	—	V	V_{GS} = 0V, I_D = 1mA
$R_{DS(on)}$	Static Drain-to-Source On-resistance	—	0.32	0.38	Ω	V_{GS}=10V,I_D = 3.2A
		—	0.72	—		T_J = 125°C
$V_{GS(th)}$	Gate Threshold Voltage	2	—	4	V	V_{DS} = V_{GS}, I_D = 0.32mA
		—	2.1	—		T_J = 125°C
I_{DSS}	Drain-to-Source Leakage Current	—	—	1	μA	V_{DS} =650V,V_{GS} = 0V
		—	—	50		T_J = 125°C
I_{GSS}	Gate-to-Source Forward Leakage	—	—	100	nA	V_{GS} =30V
		—	—	-100		V_{GS} = -30V
Q_g	Total Gate Charge	—	22	—	nC	I_D= 6A, V_{DS}= 200V, V_{GS} = 10V
Q_{gs}	Gate-to-Source Charge	—	4.3	—		
Q_{gd}	Gate-to-Drain("Miller") Charge	—	8	—		
$t_{d(on)}$	Turn-on Delay Time	—	11	—	ns	V_{GS}=10V, V_{DS}=400V, R_L=81.6Ω, R_{GEN}=3.4Ω I_D=4.9A
t_r	Rise Time	—	6	—		
$t_{d(off)}$	Turn-Off Delay Time	—	29	—		
t_f	Fall Time	—	6	—		
C_{iss}	Input Capacitance	—	804	—	pF	V_{GS} = 0V V_{DS} = 100V f = 600KHz
C_{oss}	Output Capacitance	—	34	—		
C_{rss}	Reverse Transfer Capacitance	—	3.4	—		

Source-Drain Ratings and Characteristics

Symbol	Parameter	Min.	Typ.	Max.	Units	Conditions
I_S	Continuous Source Current (Body Diode)	—	—	11	A	MOSFET symbol showing the integral reverse p-n junction diode. 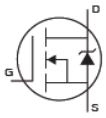
I_{SM}	Pulsed Source Current (Body Diode)	—	—	44	A	
V_{SD}	Diode Forward Voltage	—	0.82	1.2	V	I_S=4.9A, V_{GS}=0V
t_{rr}	Reverse Recovery Time	—	247	—	ns	T_J = 25°C, I_F =11A, di/dt = 100A/μs
Q_{rr}	Reverse Recovery Charge	—	2.46	—	μC	

Test Circuits and Waveforms

EAS test circuits:

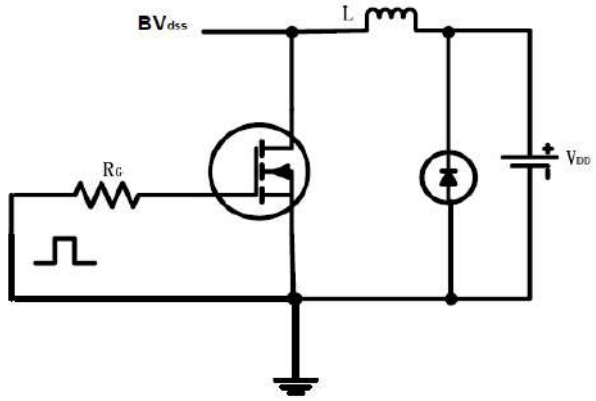

Gate charge test circuit:

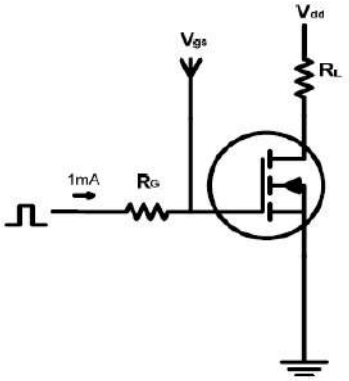

Switch Time Test Circuit:

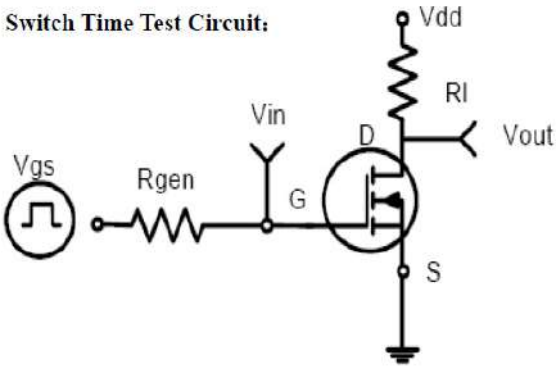

Switchings Waveforms:

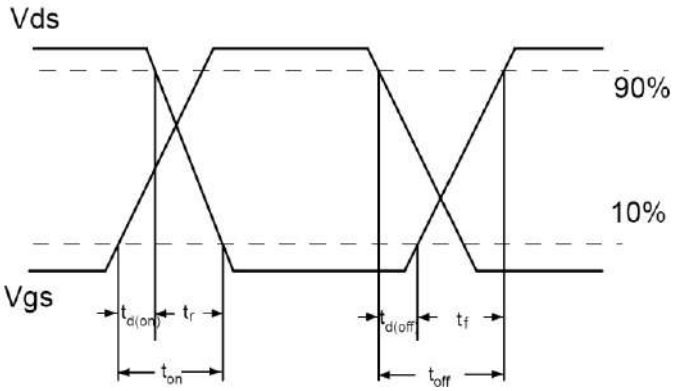

Notes:

①Calculated continuous current based on maximum allowable junction temperature.

②Repetitive rating; pulse width limited by max. junction temperature.

③The power dissipation P_D is based on max. junction temperature, using junction-to-case thermal resistance.

④The value of $R_{\theta JA}$ is measured with the device mounted on 1 in^2 FR-4 board with 2oz. Copper, in a still air environment with T_A =25°C

Typical Electrical and Thermal Characteristics

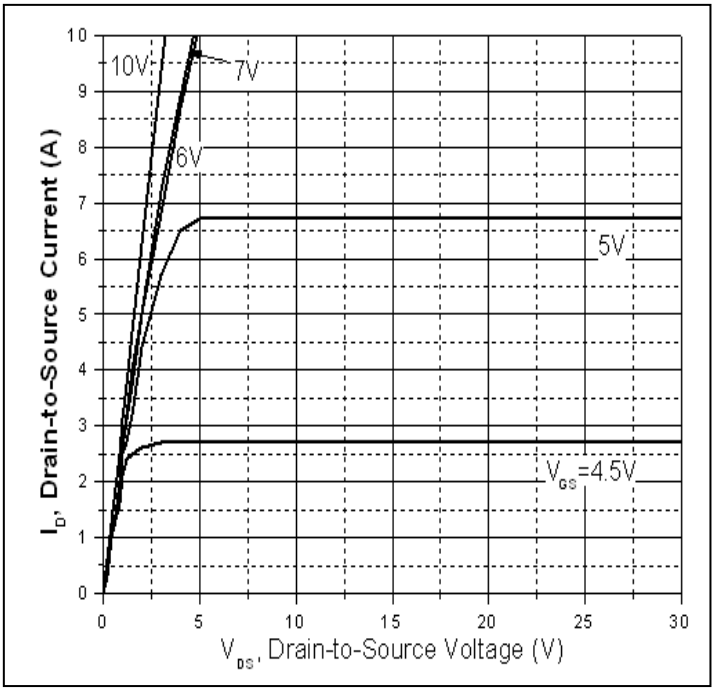

Figure 1. Typical Output Characteristics

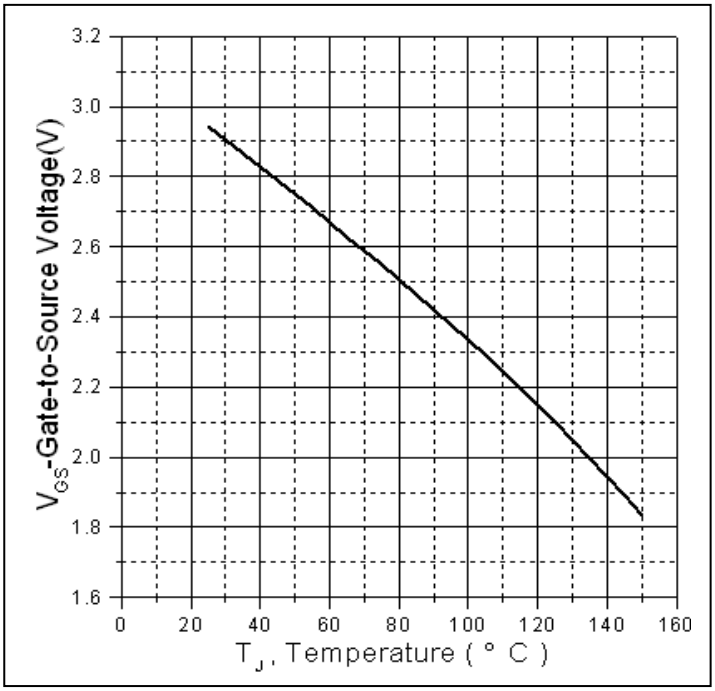

Figure 2. Gate to Source Cut-off Voltage

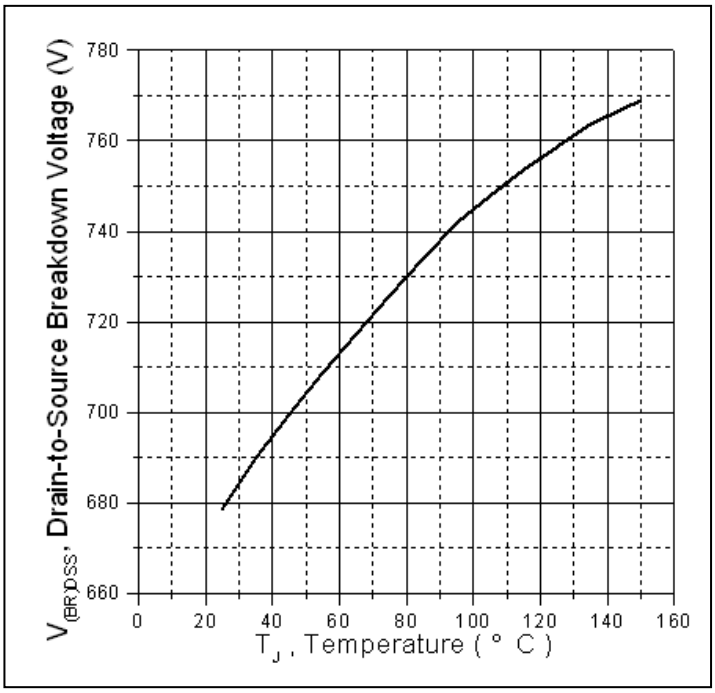

Figure 3. Drain-to-Source Breakdown Voltage Vs. Case Temperature

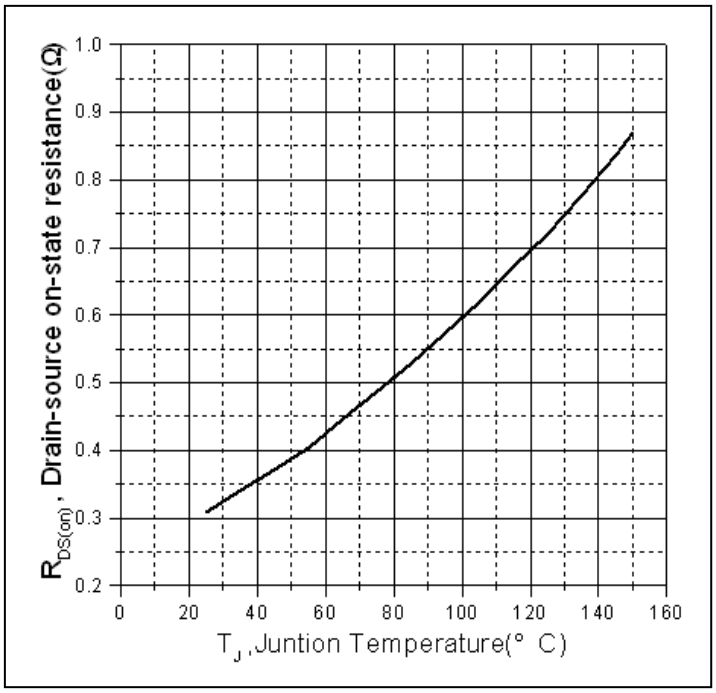

Figure 4. Normalized On-Resistance Vs. Case Temperature

Typical Electrical and Thermal Characteristics

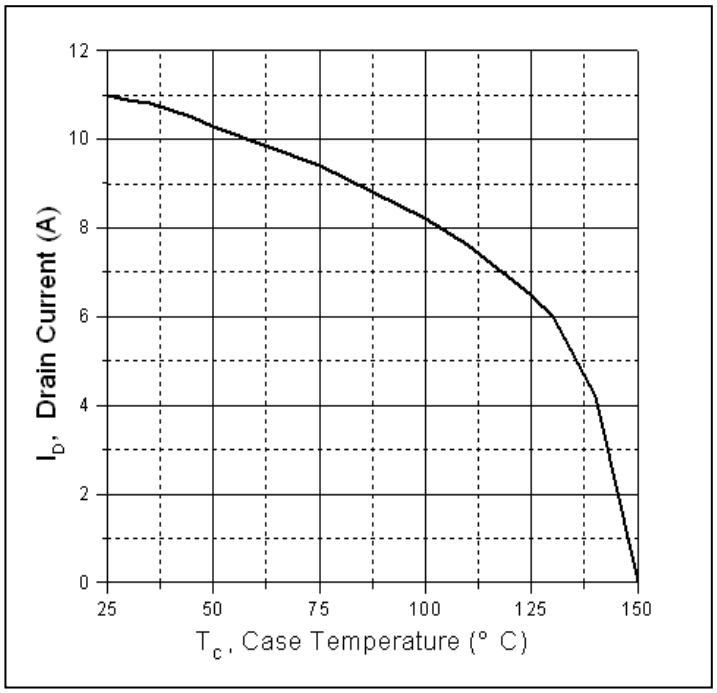

Figure 5. Maximum Drain Current Vs. Case Temperature

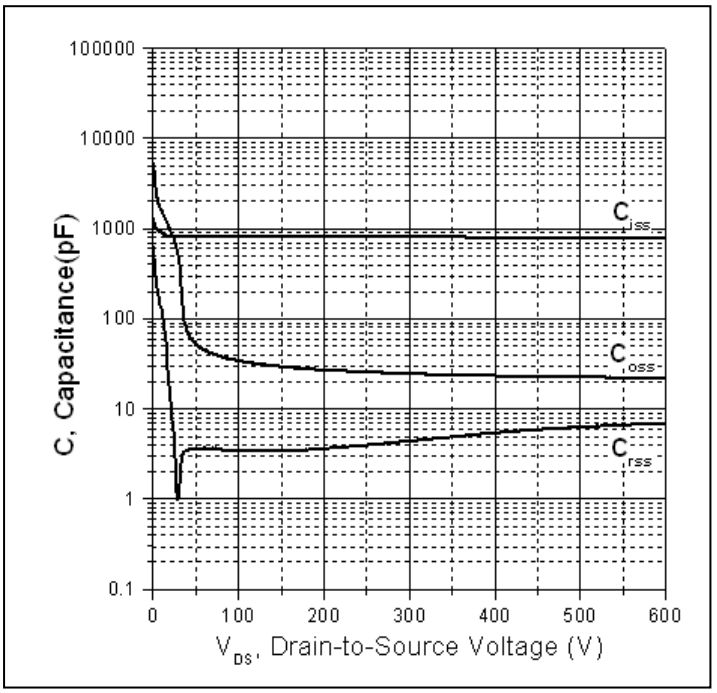

Figure 6. Typical Capacitance Vs. Drain-to-Source Voltage

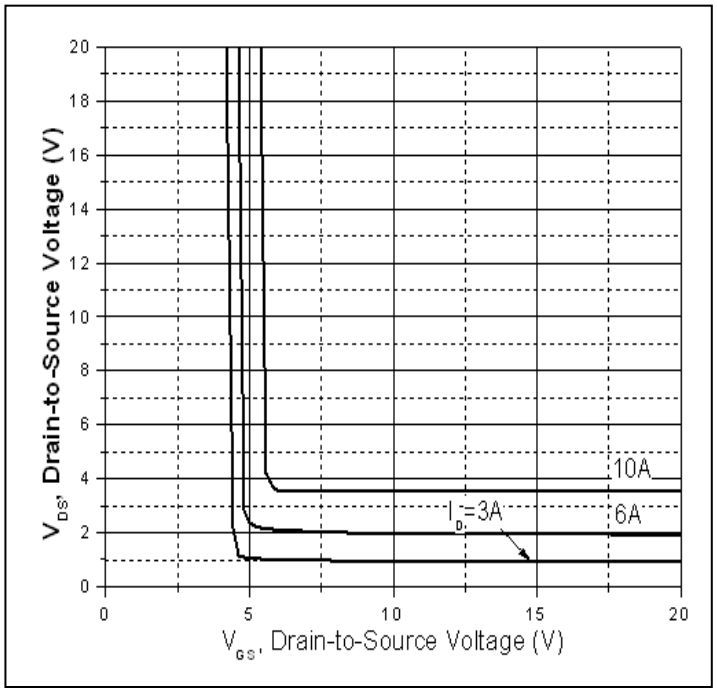

Figure 7. Drain-to-Source Voltage Vs. Gate-to-Source Voltage

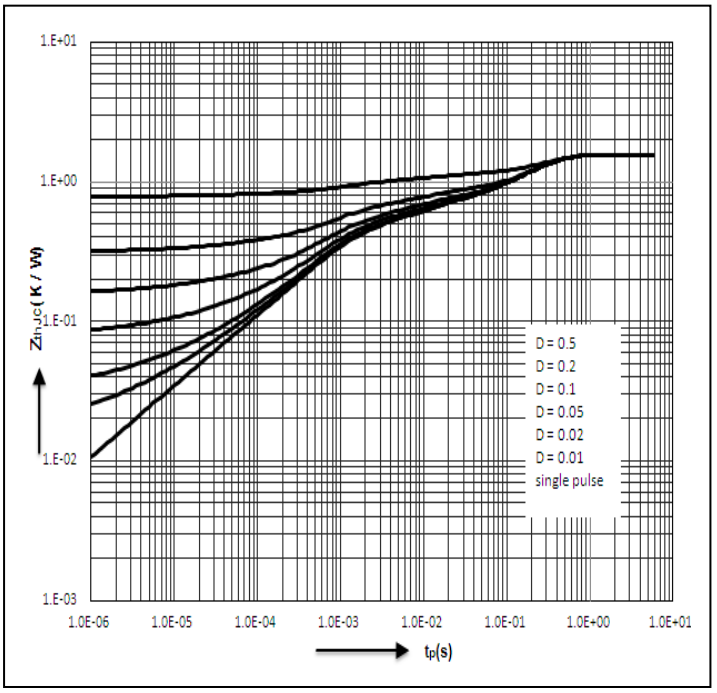

Figure 8. Maximum Effective Transient Thermal Impedance, Junction-to-Case

Mechanical Data

TO-220 PACKAGE OUTLINE DIMENSION

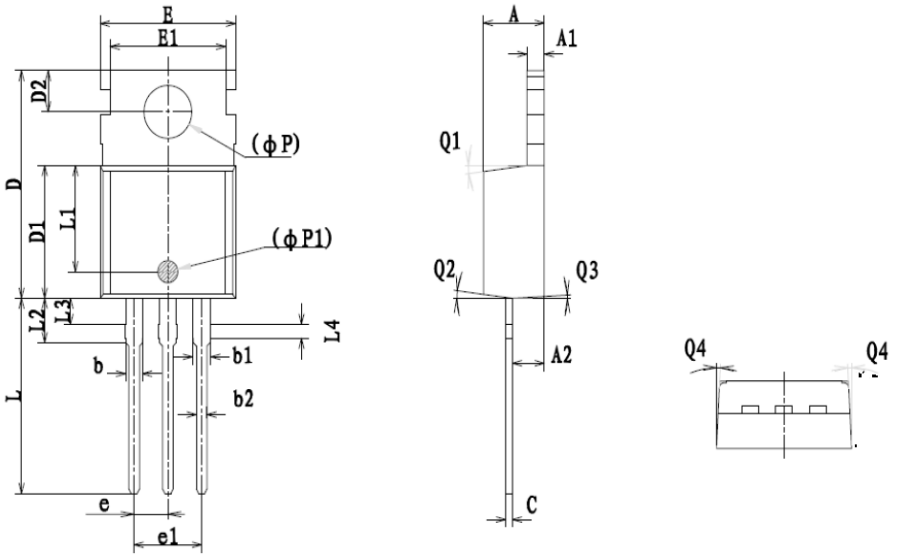

Symbol	Dimensions In Millimeters			Dimensions In Inches		
	Min	Nom	Max	Min	Nom	Max
A	4.400	4.550	4.700	0.173	0.179	0.185
A1	1.270	1.300	1.330	0.050	0.051	0.052
A2	2.240	2.340	2.440	0.088	0.092	0.096
b	–	1.270	–	-	0.050	-
b1	1.270	1.370	1.470	0.050	0.054	0.058
b2	0.750	0.800	0.850	0.030	0.031	0.033
C	0.480	0.500	0.520	0.019	0.020	0.021
D	15.100	15.400	15.700	0.594	0.606	0.618
D1	8.800	8.900	9.000	0.346	0.350	0.354
D2	2.730	2.800	2.870	0.107	0.110	0.113
E	9.900	10.000	10.100	0.390	0.394	0.398
E1	-	8.700	-	-	0.343	-
ΦP	3.570	3.600	3.630	0.141	0.142	0.143
ΦP1	1.400	1.500	1.600	0.055	0.059	0.063
e	2.54BSC			0.1BSC		
e1	5.08BSC			0.2BSC		
L	13.150	13.360	13.570	0.518	0.526	0.534
L1	7.35REF			0.29REF		
L2	2.900	3.000	3.100	0.114	0.118	0.122
L3	1.650	1.750	1.850	0.065	0.069	0.073
L4	0.900	1.000	1.100	0.035	0.039	0.043
Q1	5^0	7^0	9^0	5^0	7^0	9^0
Q2	5^0	7^0	9^0	5^0	7^0	9^0
Q3	5^0	7^0	9^0	5^0	7^0	9^0
Q4	1^0	3^0	5^0	1^0	3^0	5^0

Ordering and Marking Information

Device Marking: SSF11NS65U

Package (Available)

TO-220

Operating Temperature Range

C : -55 to 150 ºC

Devices per Unit

Package Type	Units/ Tube	Tubes/Inner Box	Units/Inner Box	Inner Boxes/Carton Box	Units/Carton Box
TO-220	50	20	1000	10	10000

Reliability Test Program

Test Item	Conditions	Duration	Sample Size
High Temperature Reverse Bias(HTRB)	T_j=125°C to 150°C @ 80% of Max $V_{DSS}/V_{CES}/V_R$	168 hours 500 hours 1000 hours	3 lots x 77 devices
High Temperature Gate Bias(HTGB)	T_j=150°C @ 100% of Max V_{GSS}	168 hours 500 hours 1000 hours	3 lots x 77 devices